CRT DATABASE

BARCO INDUSTRIES

VIDEO & COMMUNICATIONS

COLOUR MONITOR

CM 22

TECHNICAL MANUAL

C598433

CRT DATABASE

BARCO INDUSTRIES VIDEO & COMMUNICATIONS

Barco Video & Communications n.v.
Th. Sevenslaan 106
B-8500 Kortrijk (Belgium)
Tel. 056 / 21.11.24 - Telex 85.827 barind b
HR. Ieper 28.188 - BTW 421.577.638
KB Kortrijk 460-0328901-14

COLOUR MONITOR

CM 22

TECHNICAL MANUAL

C598433

JVM 210383

CRT DATABASE

Service Safety Precautions

WARNING : X-RADIATION

X - RADIATION CAN BE CAUSED IF CRITICAL COMPONENTS ARE REPLACED BY NON-CONFORM COMPONENTS. THESE COMPONENTS ARE MARKED IN THIS SERVICE MANUAL BY AN ✳

WARNING : SAFETY

ELECTRIC SHOCK OR FIRE HAZARD CAN BE CAUSED IF CRITICAL COMPONENTS ARE REPLACED BY NON-CONFORM COMPONENTS. THESE COMPONENTS ARE MARKED IN THIS MANUAL BY A ⚠ SIGN.

REPLACE WITH CONFORM TYPES ONLY !

1. Comply with all caution and safety-related notes on or inside the instrument cabinet, on the chassis, or on the picture tube.
2. When service is required, maintain correct lead dress and parts placement. Extra precaution should be taken to assure proper lead dress in the High Voltage circuit area.

   Where a malfunction has occured, those components or circuits that indicate evidence of abnormality should be replaced or corrected. Always use the manufacturer's safety specified replacement components.
3. Do not remove, install or handle the picture tube in any manner unless shatter-proof goggles are worn. People not so equipped should be kept away while picture tubes are handled. Keep picture tube away from the body while handling.
4. Protective shields are provided on this chassis for the protection of both the service technician and the customer.

   Protection shields removed for servicing convenience must be correctly re-installed and ANY MISSING SHIELD MUST BE REPLACED. DO NOT OPERATE THIS INSTRUMENT WITHOUT THE PROTECTIVE SHIELDS IN POSITION AND PROPERLY SECURED.
5. After any service intervention, the service technician must be sure that no protective device built into the instrument by the manufacturer has become defective, or inadvertently defeated during servicing. Therefore, the following checks are recommended for the continued protection of the customer and service technician.

GROUNDING CONTINUITY TEST

— remove mains plug from wall outlet.

— with an ohm-meter in its lowest resistance range, measure resistance between the grounding prong of the mains plug and all accessible conductive parts.

THE METER MUST READ ZERO OHM

— the mains plug still being removed from the wall outlet, switch on the instrument.

— with an ohm-meter in its highest resistance range, measure resistance between the grouding prong of the mains plug and the two other prongs of the mains plug.

BOTH METER READINGS MUST BE MORE THAN 5 MEGOHM.

ANY MEASUREMENTS NOT WITHIN THE LIMITS OUTLINED ABOVE THE INDICATIVE OF A POTENTIAL SHOCK HAZARD AND CORRECTIVE ACTION MUST BE TAKEN BEFORE RETURNING THE INSTRUMENT TO THE CUSTOMER.

X-RADIATION AND HIGH VOLTAGE LIMITS

The primary source of X-radiation in solid state display units is the picture tube. The picture tube is specially constructed to limit X-radiation emissions. The shields and mounting hardware for picture tubes have an X-radiation protection function and must be properly in place.
For continued X-radiation protection, the replacement tube must be the same type as the original, including suffix letter. High voltage is maintained within specified limits by the use of close tolerance safety related components / adjustments in the power supply circuit. Refer to the Technician X-radiation warning note on the Chassis Schematic and Instrument Labels in the Basic Service Data for specific high voltage limits of each chassis and X-radiation Protection Circuits. If high voltage exceeds specified limits, check each component specified on the chassis schematic diagram and take necessary corrective action.

PRODUCT SAFETY NOTICE

Many electrical and mechanical parts in display units have special safety-related characteristics. These characteristics are often not evident from visual inspection nor can the protection afforded by then necessarily be obtained by using replacement components rated for higher voltage, wattage, etc. Replacement parts which have these special safety characteristics are identified in this Data and its Supplements and Bulletins. Electrical components having such features are identified by ⚠ or ✳ on the schematics and on the parts list in this Data and its Supplements and Bulletins. The use of a substitute replacement which does not have the same safety characteristics as the recommended replacement part shown in the parts list in this Data and its Supplements and Bulletins, may create shock, fire, or ejessive X-radiation.

NOTE FOR USERS IN THE UNITED KINGDOM :

IMPORTANT :

The wires of the mains lead are coloured in accordance with the following code :

Green and Yellow : EARTH
Blue : NEUTRAL
Brown : LIVE
Plug fusing value : 5 A

As the colours of the wires in the mains lead of this apparatus may not correspond with the colotred markings identifying the terminals in your plug, proceed as follows :

— The wire which is coloured Green and Yellow must be connected to the terminal in the plug which is marked by the letter E or by the safety earth symbol ⏚ or coloured green and yellow.

— The wire which is coloured Blue must be connected to the terminal which is marked with the letter N or coloured black.

— The wire which is coloured Brown must be connected to the terminal which is marked with the letter L or coloured red.

WARNING : This apparatus must be earthed.

CRT DATABASE

FUSE TABLE CM 22

UNIT	DESCRIPTION	POSITION	BC REF. N°
Power supply unit	Fuse 6.3 A slow	F1	C314145
	Fuse 2 A slow	F2	C314116
	Fuse 2 A slow	F3	C314116
	RRCFF E1 J 0.40	SR49	C1011907
	RRCFF E1 J 0.40	SR50	C1011907
Horizontal deflection unit	RRCFF E47 K 0.50	SR11	C1012947
	RRCFFUL 47E J 0.25	SR18	C1011209
	RRCFFUL 47E J 0.25	SR19	C1011209
Vertical deflection unit	RRCFFUL 47E J 0.50	SR14	C1012209
	RRCFFUL 2E2 J 0.25	SR44	C1011049
	RRCFFUL 220F J 0.25	SR70	C1011289
	RRCFFUL 2E2 J 0.25	SR72	C1011
Input output unit	RRCFFUL 10E J 0.25	SR16	C1011129
	RRCFFUL 10E J 0.25	SR17	C1011129
RGB out unit	RRCFFUL 1K J 0.25	SR3	C1011369
	RRCFFUL 1K J 0.25	SR13	C1011369
	RRCFFUL 1K J 0.25	SR23	C1011369
	RRCFFUL 22E J 0.50	SR48	C1012169

CAUTION :

For continued protection against fire hazard.

- Replace with the same type of fuse.
- Refer replacement to qualified service personnel.

CRT DATABASE

CONTENTS

SECTION I : THE CM 22

SECTION II : OPERATION REFERENCE CHART

SECTION III : TECHNICAL SPECIFICATIONS

SECTION IV : MECHANICAL ASSEMBLIES

PART I : • ACCESS TO THE DIFFERENT BOARDS
• BOARD LOCATION

PART II : MECHANICAL SPAREPARTS

PART III : RACKMOUNTING

PART IV : DIMENSIONS & WEIGHT

SECTION V : BLOCKDIAGRAM

• GENERAL DESCRIPTION
• INTERCONNECTION DIAGRAM

SECTION VI : UNITS

INCLUDING : • COMPONENT LOCATION
• DIAGRAM
• CIRCUIT DESCRIPTION
• ADJUSTMENT PROCEDURE
• PARTSLIST

APPENDIX A : CODES TO PARTSLIST

APPENDIX B : BLOCKDIAGRAM OF INTEGRATED CIRCUITS

APPENDIX C : RECOMMENDED SPARE PARTSLIST

CRT DATABASE

SECTION I : THE CM 22

The CM 22 is one of the BVC colour monitors which are designed for applications where a good picture quality is required.

The CM 22 is equipped with a 9 inch (22 cm) in line gun picture tube ; high resolution. The dimensions and weight make it most suitable for portable applications or where dimensions are important. The CM 22 is available in cabinet or rack version.

The set is equipped with an audio amplifier and a built in speaker. You can also plug in a headphone, which automatically disconnects the internal speaker. Video composite and RGB inputs are standard on CM 22.

The switch mode power supply allows stable performance in areas where the mains supply may vary under certain circumstances. Feeding the CM 22 with 12 V battery is also possible.

The modular design which has been used in this monitor allows a quick and easy service.

For the moment four CM 22 types can be delivered ;
CM 22 PAL
CM 22 NTSC 3-58
CM 22 PAL Ampex
CM 22 NTSC 3-58 Ampex

The NTSC versions have standard the pulse cross possibility. The ampex versions distinguish themself on some mechanical modifications and there is no possibility for battery supply.

CRT DATABASE

SECTION II : OPERATION REFERENCE CHART

FRONT VIEW

ush on / push off
ower switch with
nternal power on light

olume control

ut-off and gain controls :
nly for service engineers.

otary potentiometer with push/pull
witch for adjusting the brightness.
ushing in : brightness is
et upon preset.
ulling out : brightness is controlled
y potentiometer.

Multiturn preset
otentiometer for brightness.

Rotary potentiometer with push/pull
switch for adjusting the contrast
Pushing in : contrast is set
upon preset.
Pulling out : contrast is controlled
by the potentiometer.

Multiturn preset
potentiometer for contrast.

Rotary potentiometer with push/pull
switch for hue control (only for NTSC).
Pushing in : hue is set upon preset.
Pulling out : hue is controlled by the potentiometer.

Multiturn preset potentiometer
for hue control.

Rotary potentiometer with push/pull
switch for adjusting colour
saturation.
Pushing in : colour saturation is set
upon preset.
Pulling out : colour saturation is
controlled by the potentiometer.
Fully anticlockwise disactivates
colour and colour rejector.

Multiturn preset potentiometer
for colour saturation.

Tally light
(see further information)

Jack for headphone approx.
500 mW - 8 Ohm
(disconnects internal speaker)

Lights up when temperature
becomes to high.

Lights up when battery voltage
exceeds limit voltage.

When pushed in, the selection
is controlled by remote switches.

~~Not used~~ Cross pulse

Selects RGB
input signal.

When pushed in the red
and green channels are
disconnected

Selects video 2 input signal.

When pushed in overscan
is selected, when not
pushed in underscan is selected.

Selects video 1
input signal.

Pushbutton for manual degaussing.

Figure 1

CRT DATABASE

BACK VIEW

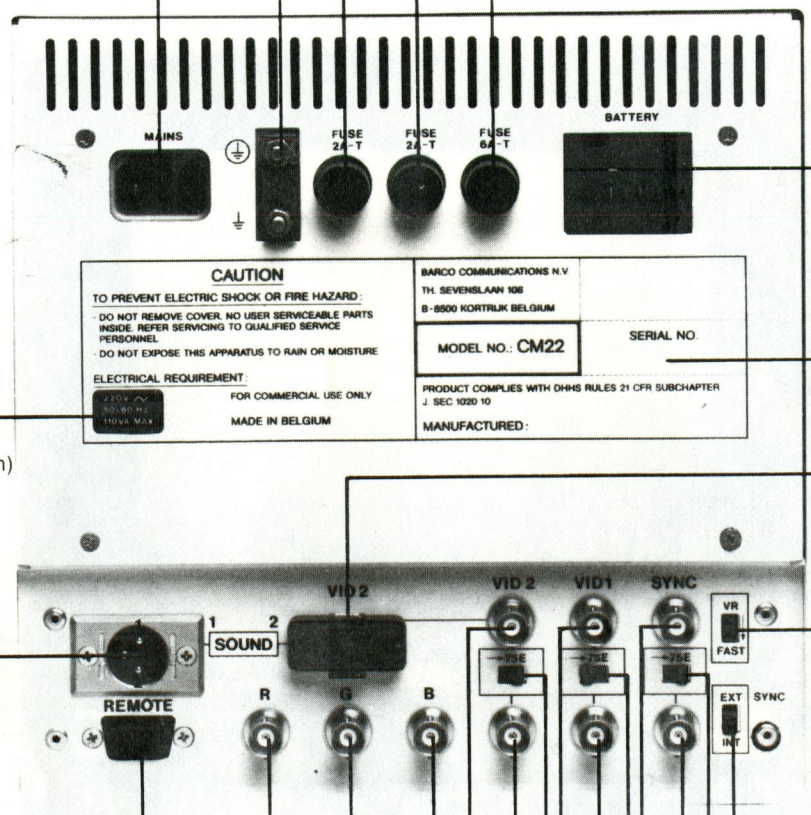

Grounding stud

Mains input connector ;
notice voltage on label 1

1. : live
2. : neutral
3. : ground

FUSES : For continued protection against fire hazard replace with the same type

Plug for battery

1. : ground (−)
2. : ground (−)
3. : battery (+ 12 V)
4. : battery (+ 12 V)

Labels indicating part and serial number.

Please note these numbers in all correspondence

Label 1 : indicating operating voltage

(see further information)

8 pole connector

Pin 1 : sound 2 input
2 : video 2 input
3 : ground
4 : output vid. 1
5 : ground
6 : floating earth
7 : ground
8 : output audio 1

INPUT SOUND

1. : N.C.
2. : audio 1 in
3. : ground

Should be placed in FAST position when using videorecorder.

Synchronisation selection switch

Termination switch :
should be placed in 75 Ohm position when output is not used.

Remote control cannon D type 9 pins

1. : video 1
2. : video 2
3. : RGB
4. : colour killer
5. : tally light vid. 1
6. : ground
7. : tally light vid. 2
8. : mixed mode
9. : ground remote

(see further information)

Analogue input BNC connectors for resp red, green and blue, terminated with 75 Ohm.

Video 2 input

Video 2 input signal looped through output

Termination switch : should be placed in 75 Ohm position when output is not used

Synchronisation signal looped through output

Synchronisation signal input

Termination switch :
should be placed in 75 Ohm position when output is not used.

Video 1 input signal looped through output

Video 1 input

Figure 2

CRT DATABASE

THE TALLY LIGHT

The tally light behind the window can be activated in 6 ways. The user can hardware choose which way he desires.
The tally light lights up when

1) Video 1 is selected by the frontpanel control : connect pin 5 of the remote connector to ground (pin 6).
2) Video 2 is selected by the frontpanel control : connect pin 7 of the remote connector to ground (pin 6).
3) Video 1 or video 2 is selected by the frontpanel control : connect pin 5 and 7 of the remote connector to ground (pin 6).
4) Video 1 is selected by the remote panel : connect pin 5 of the remote connector to remote ground (pin 9).
5) Video 2 is selected by the remote panel : connect pin 7 of the remote connector to remote ground (pin 9).
6) Video 1 or video 2 is selected by the remote panel : connect pin 5 and 7 of the remote connector to remote ground (pin 9).

The user has the possibility to mount a plastic film in the tally light window (indicated with D in figure 3). The user plastic film can befor instance.

CH 1

Pin 8 : mixed mode ; described in SECTION V ; decoder unit.

TALLY LIGHT

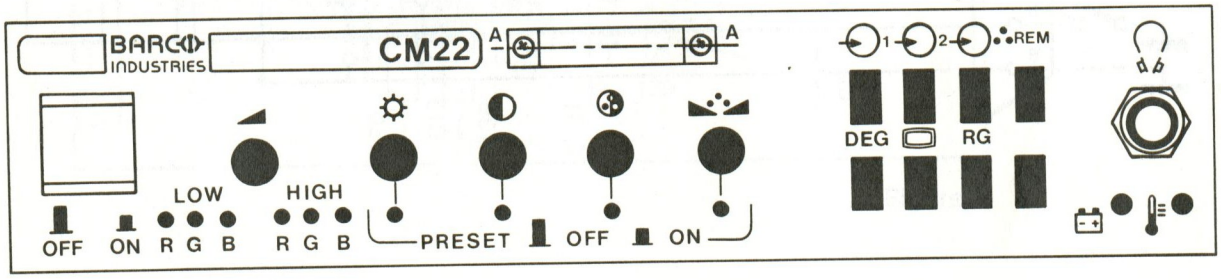

SECTION A A

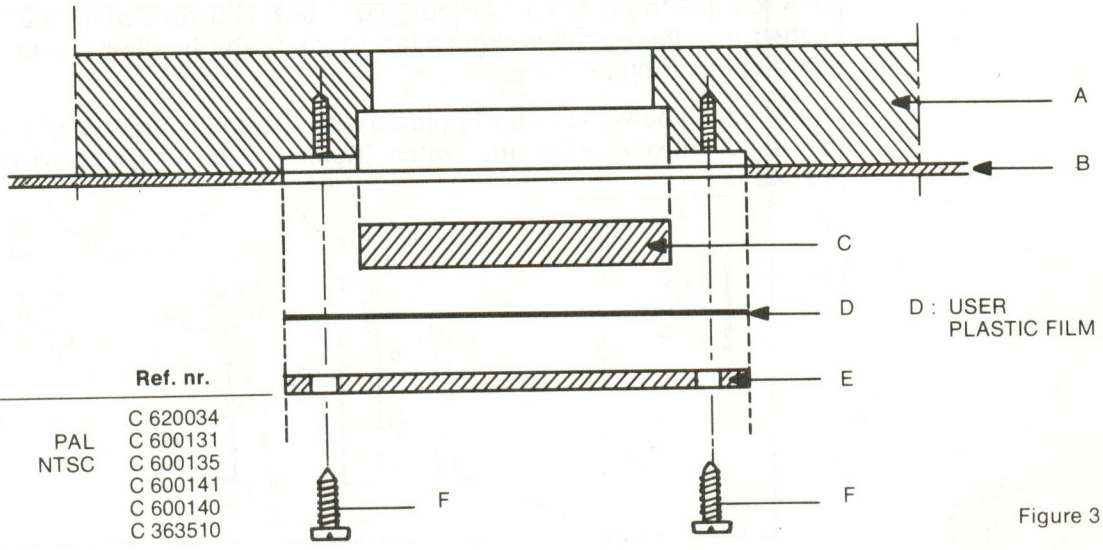

D : USER PLASTIC FILM

Description		Ref. nr.
A : FRONTFACE (bezzel)		C 620034
B : DPL	PAL	C 600131
	NTSC	C 600135
C : TALLY OPAAL		C 600141
E : TALLY WINDOW		C 600140
F : SMC 2.2 x 6.5 D 7971 C		C 363510

Figure 3

CRT DATABASE

REMOTE CONTROL

At the rear of the set, your find a cannon D type connector (9 pins) at which you can connect a remote control panel. It enables to select video 1, video 2 and RGB with wired remote control.

The meaning of pin 5 an 7 is described in the section ,,TALLY LIGHT''.

Please, find below the diagram for connection :

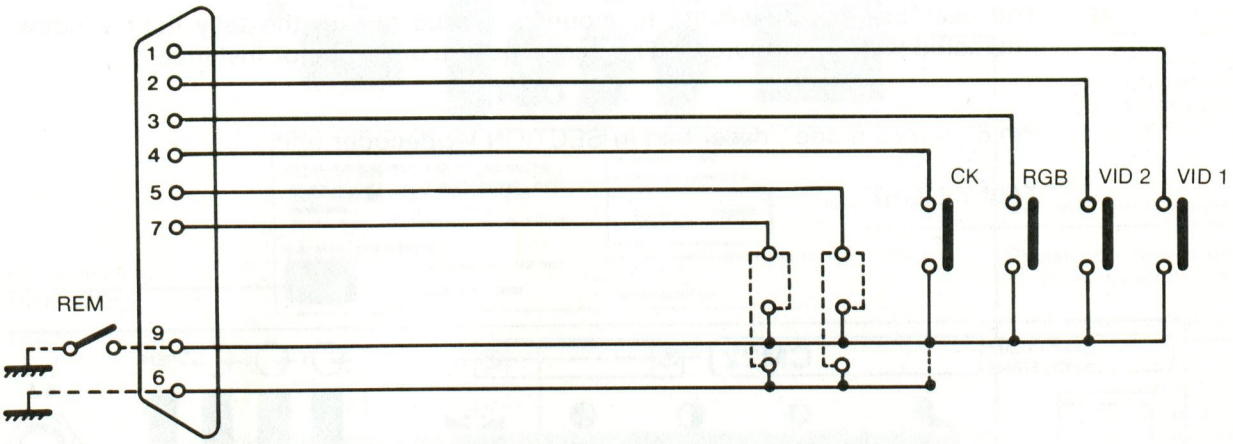

Figure 4

Pin 4 can be connected to pin 9 or to pin 6 by means of a switch. When you connect pin 4 to pin 9 the function ,,colour killer'' only activates when the remote switch is pushed in. When pin 4 is connected to pin 6, the function ,,colour killer'' can be activated on each moment.

The selection between video 1 (,pin 1), video 2 (pin 2) and RGB (pin 3) input can only remotely controlled when the switch ,,Remote control'' (REM) on the front panel is pushed in.

CRT DATABASE

SWITCHING BETWEEN 120 V AND 220 V

Depending on some jumpers, the CM 22 operates on 120 V and 220 V. You find below a part of the layout of the power supply board. The jumpers in both cases are marked with arrows.

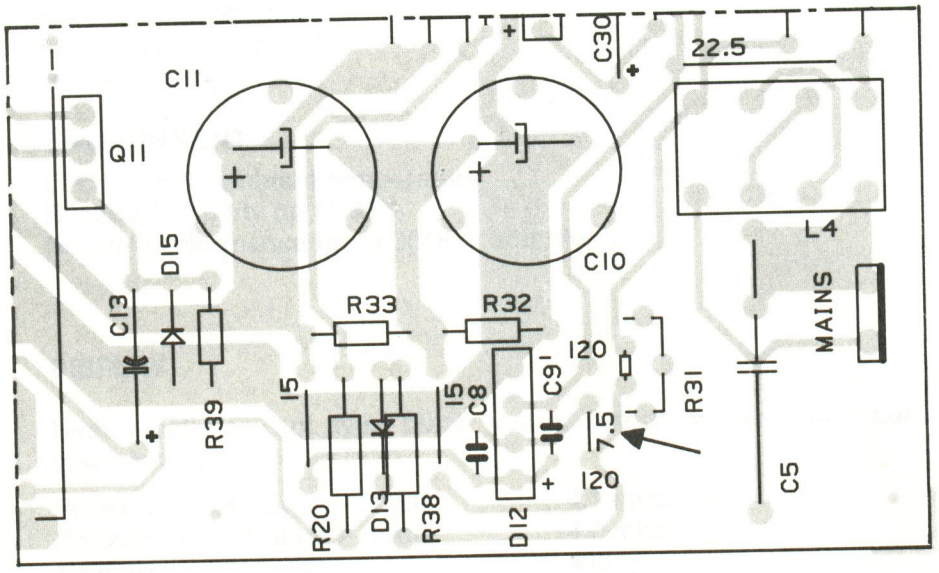

Figure 5

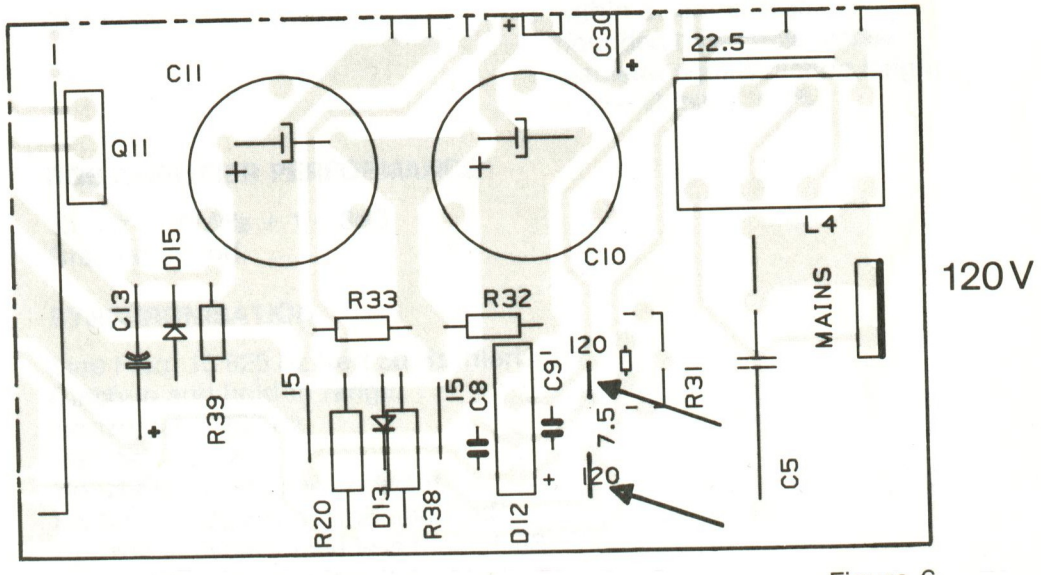

Figure 6

CRT DATABASE

SECTION III : TECHNICAL SPECIFICATIONS

POWER REQUIREMENTS

220 VAC ± 15% or
240 VAC + 5% – 22%
45 to 65 Hz

POWER CONSUMPTION

Max 70 W on 220 V
Max 77 W or 12 V
Average 60 W

ENVIRONMENT

0° C — 45° C ambiant temperature.
Relative humidity up to 95%.
Normal performance up to 3048 m altitude.

DISPLAY

High resolution dot type black matrix autoconvergent tube deflection yoke assembly.

Horizontal Resolution – 12dB	: 4.1 mHz
Horizontal Resolution – 20dB	: 4.7 mHz
TV lines	: 430
Pitch	: 0.30 mm
Mask type	: Dot mask Non Glare black matrix
Electronic gun system	: high focus bi potential in line electronic gun
Scanning format	: - factory adjusted for 4 to 3 aspect ration underscan ; - normal scan switchable.
Geometry	: within a central area bounded by a circle whose diameter equals picture height ± 2%. Outside ± 3%.

RGB AMPLIFIER PERFORMANCE

15 kHz to 7 MHz + 1/– 3dB.
Gradual roll off.

SYNCHRONISATION

Line Freq. 15 625 Hz Vert 50 Hz interlaced.
Catch-in and hold-in range.
Horizontal ± 700 Hz.
Vertical + 3 Hz.
Horizontal Sync. time constant.
Switchable between 2 mS and 7 mS.
Horizontal flyback time less than 10 uS.
Vertical flyback time less than 1 mS.

CRT DATABASE

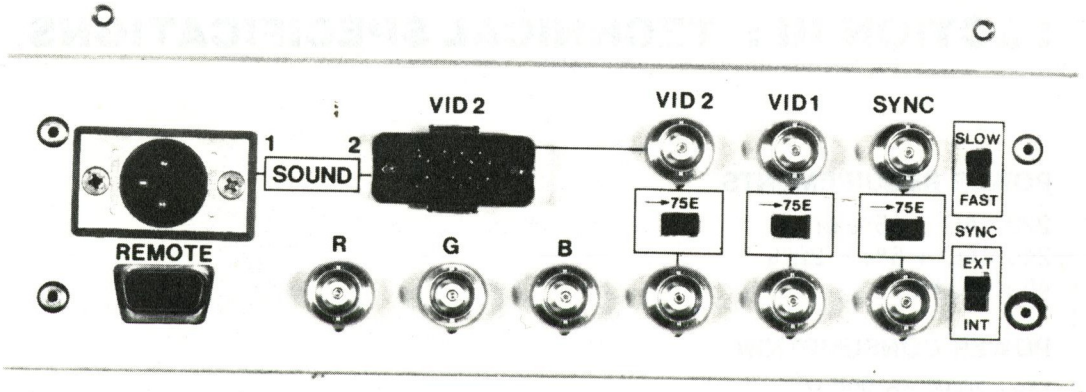

INPUT BOARD

INPUTS

— Video 1 and 2 :

Input looped through output : video 1 : BNC to BNC
video 2 : BNC to BNC to the J-plug

Level 1 V CVBS ± 6dB
Switchable termination 75 ohm
Return loss more than or equal to 30 dB

— Audio 1 and 2 :

780 mV full drive ± 6 dB
Input impedance approx. 100 k Ohm
Inputs switched with video switching

— Fast-slow sync time constant switch switches between 2 and 7 mS constant for video 1.

Video 2 automatically selects fast sync time constant mode.

CRT DATABASE

SECTION IV : MECHNICAL ASSEMBLY

PART I : ACCESS TO THE DIFFERENT BOARDS + BOARDLOCATIONS

STEP 1 : Removing the top cover

To remove the top cover, unscrew eight cross-headed screws ; four on both side (indicated with A in figure 1). The topcover can be lifted upwards.

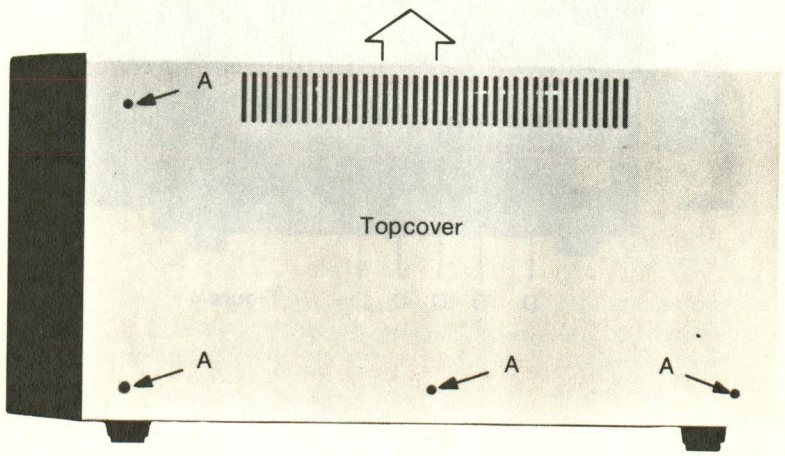

Figure 1

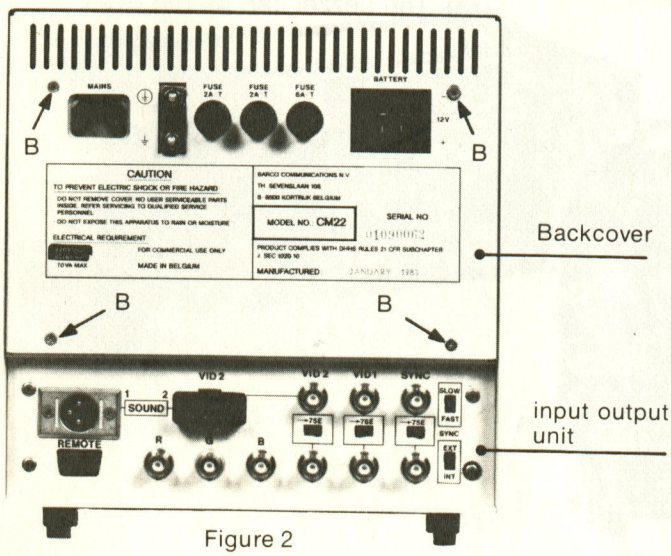

Figure 2

STEP 2 : Removing the backcover

To remove the backcover, unscrew the four cross-headed screws indicated with B in figure 2. The backcover can be removed by sliding its backwards.

STEP 3 : Removing the groundcover

a) Remove the topcover like descriped in step 1.

b) Unscrew six cross-headed screws ; three on both side (indicated with C in figure 3).

c) Turn the monitor on his topcover.

d) The groundcover can be lifted up.

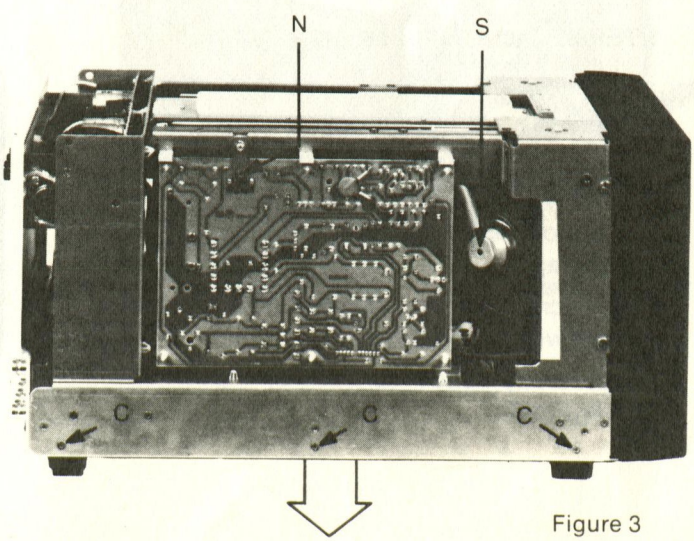

Figure 3

CRT DATABASE

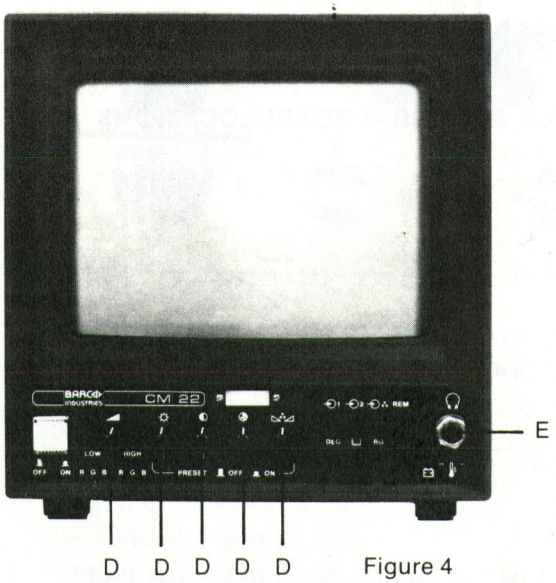

Figure 4

STEP 4 : Removing the bezzel

a) Remove the cap of each of the five knobs of the potentiometers (indicated with D in figure 4).

b) Turn all the potentiometers anticlockwise.

c) Take a screwdriver and turn the screws in the potentiometerknobs a half turn anticlockwise.

d) Remove the knobs.

e) Unscrew the nut of the headphone connector (indicated with E in figure 4).

f) Remove the topcover like descriped in step 1.

g) Unscrew at each side two screws indicated with F in figure 5.

h) The bezzel can be removed.

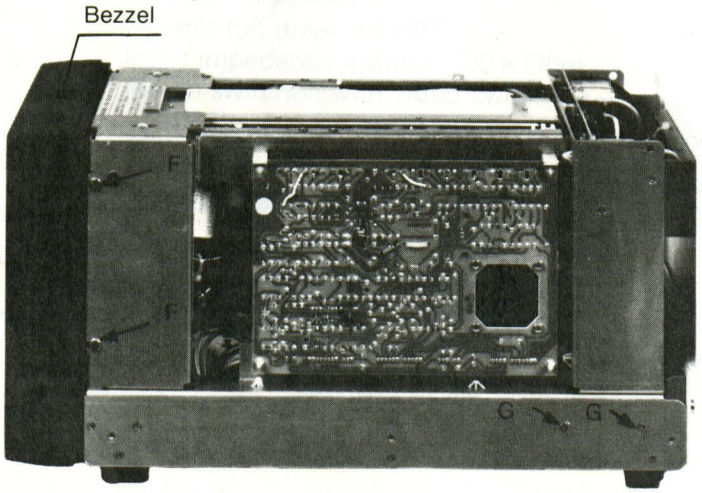

Figure 5

STEP 5 : Access to the input-output unit

a) Remove the topcover like descriped in step 1.

b) Remove the backcover like descriped in step 2.

c) Remove the groundcover like descriped in step 3.

d) Unscrew at each side two screws (indicated with G in figure 5).

e) Carefully slide out the input unit (figure 6).

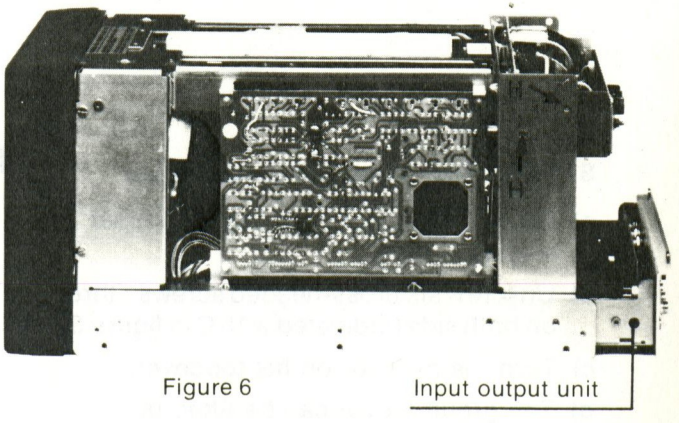

Figure 6

CRT DATABASE

STEP 6 : Access to the power supply unit

a) Slide out the input output unit like descriped in step 5.

b) Unscrew at each side two screws (indicated with H in figure 6).

c) At the under edge of the power supply board, you will note three white clips. Push them down so that you can rotate the board (figure 7).

d) You can fix the board in this position by screwing a screw H in thread K through hole J (see figures 6 and 7).

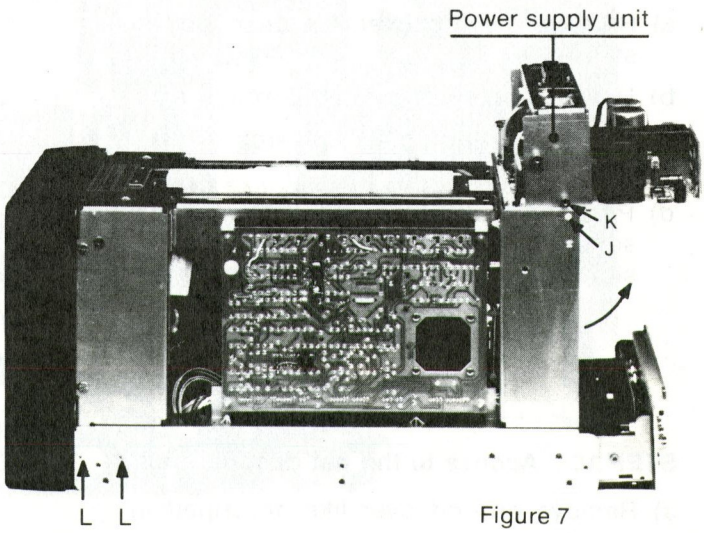

Figure 7

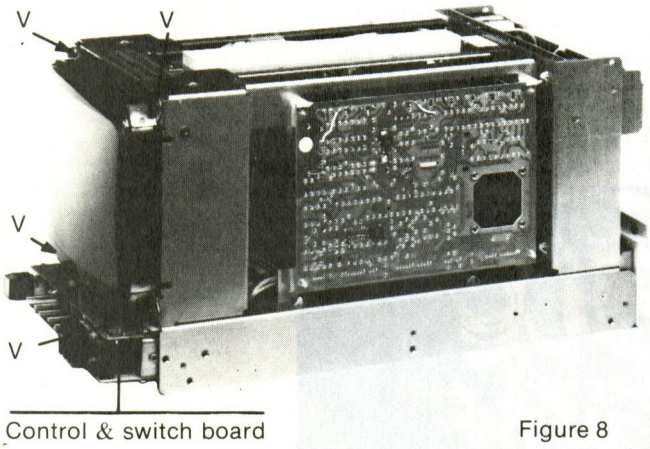

Figure 8

STEP 7 : Access to the control & switch board

a) Remove the bezzel like descriped in step 4.

b) Remove the groundcover like descriped in step 3.

c) Unscrew the four screws ; two at both side (indicated with L in figure 7).

g) Gently slide out the control & switch board (figure 8).

STEP 8 : Access to the vertical deflection board

a) Remove the topcover like descriped in step 1.

b) Push the clips indicated with M upwards, so that you can rotate the board (figure 9).

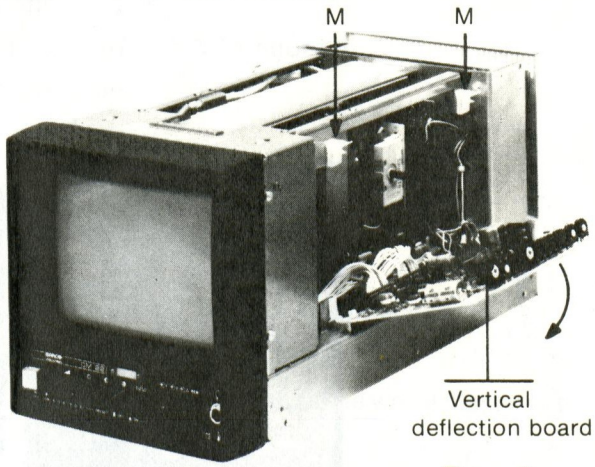

Figure 9

CRT DATABASE

STEP 9 : Access to horizontal deflection board

a) Remove the topcover like descriped in step 1.

b) Unscrew screw N indicated in figure 3.

c) Turn the fixation plate upwards (figure 10, detail P).

d) Push the clips indicated with Q upwards, so that you can rotate the board, like slown in figure 10.

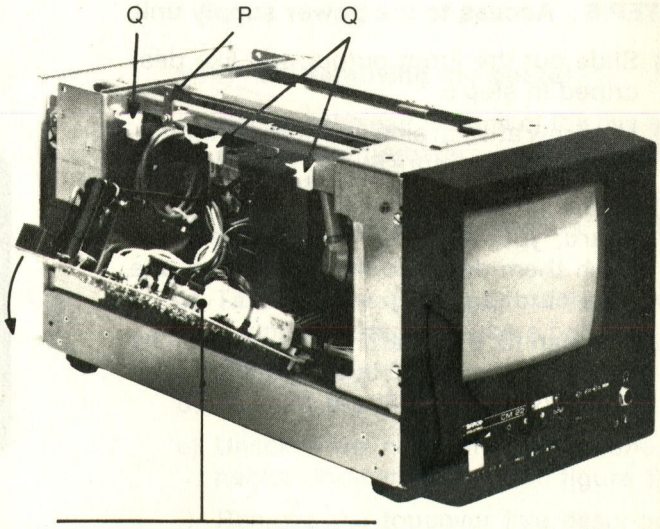

Figure 10

STEP 10 : Access to the pal decoder unit

a) Remove groundcover like descriped in step 4.

b) Push the clips R to the left (figure 11) so that you can rotate the pal decoder unit (figure 12).

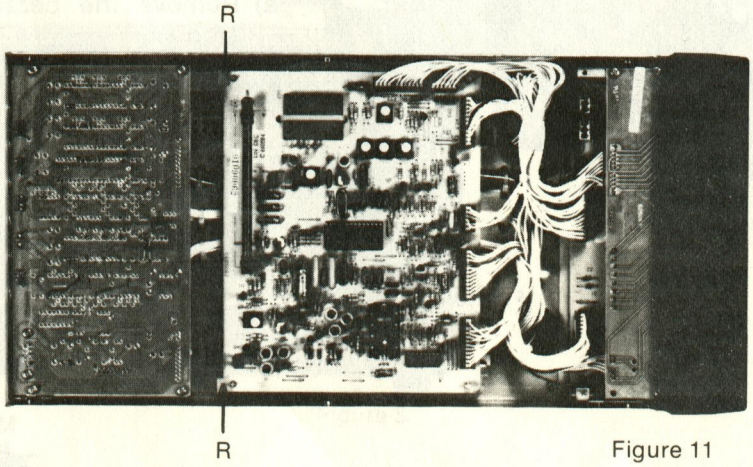

Figure 11

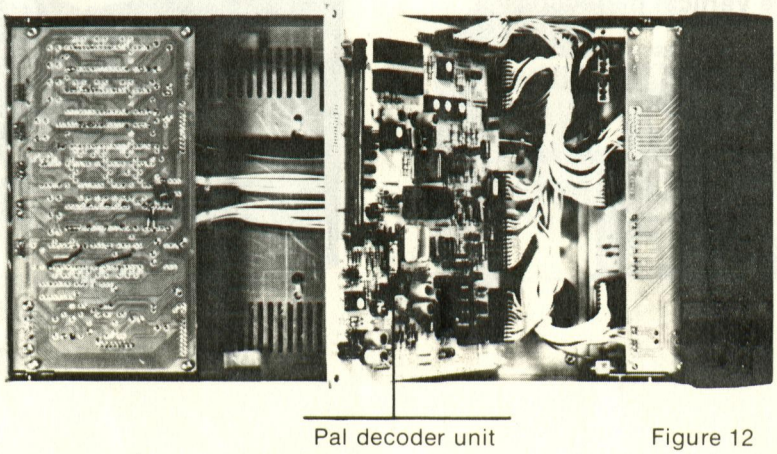

Figure 12

CRT DATABASE

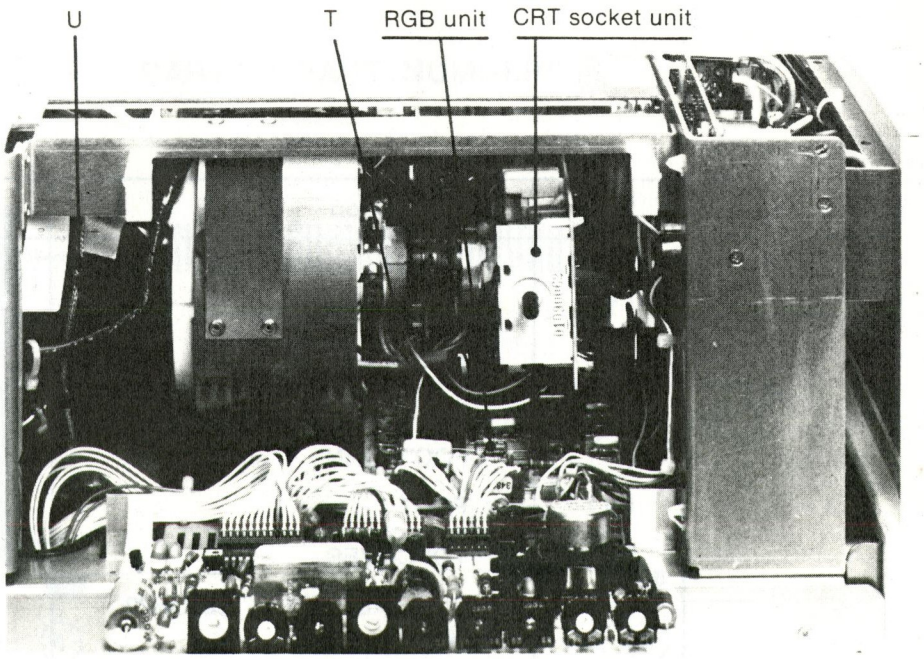

Figure 13

STEP 11 : Replacing the picture tube

a) Remove the bezzel like descriped in step 4.

b) Clip out the vertical deflection board like descriped in step 8.

c) Disconnect the CRT socket unit from the picture tube by puching it to the right (figure 13).

d) Disconnect the black focus wire from the focus potentiometer on the horizontal deflection unit.

e) Disconnect the EHT connector from the picture tube (detail S in figure 3).

f) Disconnect the wire harness coming from the deflection coils and going to the horizontal deflection unit (detail T in figure 13).

g) Before removing the picture tube, note how the aquadag (detail U in figure 13) is mounted if it should loose.

h) Unscrew the four screws indicated with V in figure 3.

i) Carefully slide out the picture tube.

STEP 12 : Removing the RGB out unit

a) Remove the topcover like descriped in step 1.

b) Clip out the vertical deflection board like descriped in step 8.

c) Disconnect all connectors and wires from the board.

d) You can remove the board by pushing in the catch of the white plastic clip.

CRT DATABASE

Nr.	Description	Ref. nr.
(1)	SMC M3x6 D965	C 361912
(2)	FRONT BEZZEL	C 620034
(3)	WASHER LA 3.2	C 367502
(4)	FOOTTURN	C 356335
(5)	FOOT	C 356336
(6)	TOPCOVER	C 600088
(7)	PICTURE TUBE 9" 220DB22 HR	C 131106
(8)	ORNAMENTAL PLATE :	
	PAL VERSION	C 600131
	NTSC VERSION	C 600135
(9)	MAINS SWITCH N30X	C 324781
(10)	SEE SECTION II	
(11)	CAP KNOB TURN	C 356884
	KNOB TURN	C 356885
(12)	CONFOBTE HEADPHONE	C 313639
(13)	CONMOPSE 12 V	C 313633
	CONFOCTE 12 V	C 313629
(14)	METAL SHEET	C 600145
	NUT	C 366965
	WASHER	C 367385
	PLASTIC SPACER	C 367384
	PLASTIC WASHER	C 367385
	SCREW	C 366964
(15)	CONMOCTE OL 6A	C 3131309
(16)	BACKCOVER	C 600119
(17)	SMC M3x6 D965	C 361912
(18)	SMC + M M3x8	C 361913
	NUT	C 366102
	WASHER	C 367502
(19)	PLASTIC WASHER	C 3131401
(20)	FUSE HOLDER	C 314509
	FUSE HOLDER SOCKET	C 314507

CRT DATABASE

PART II : PART NUMBERS

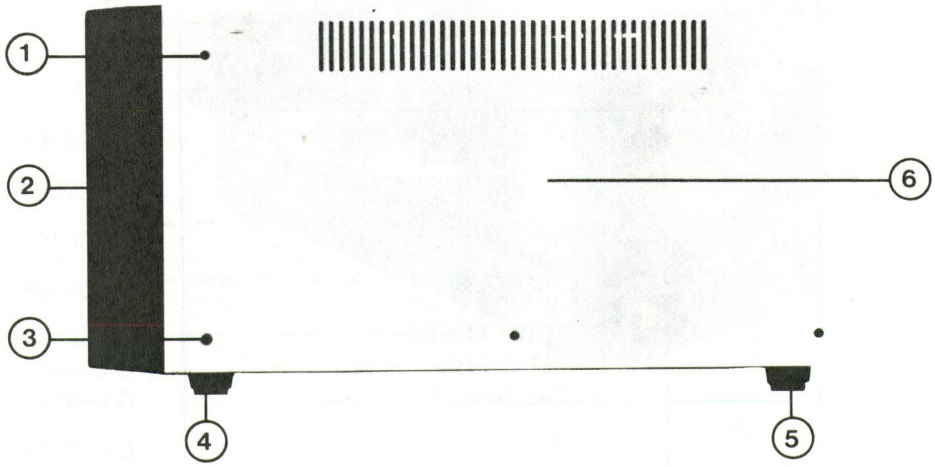

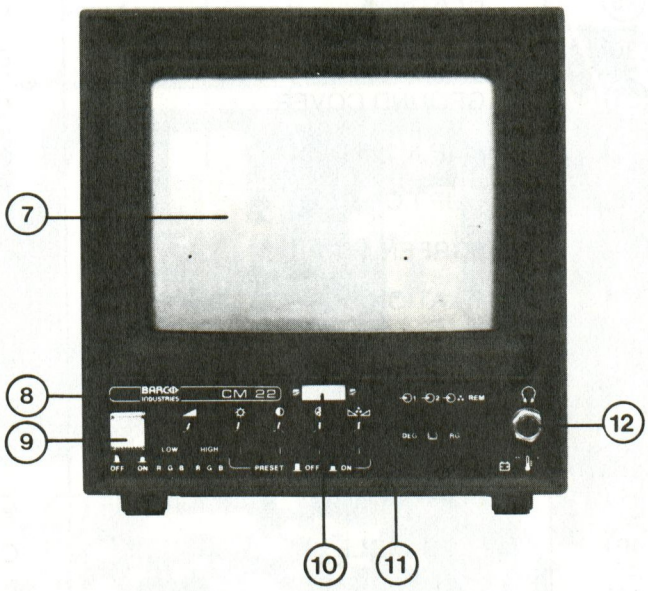

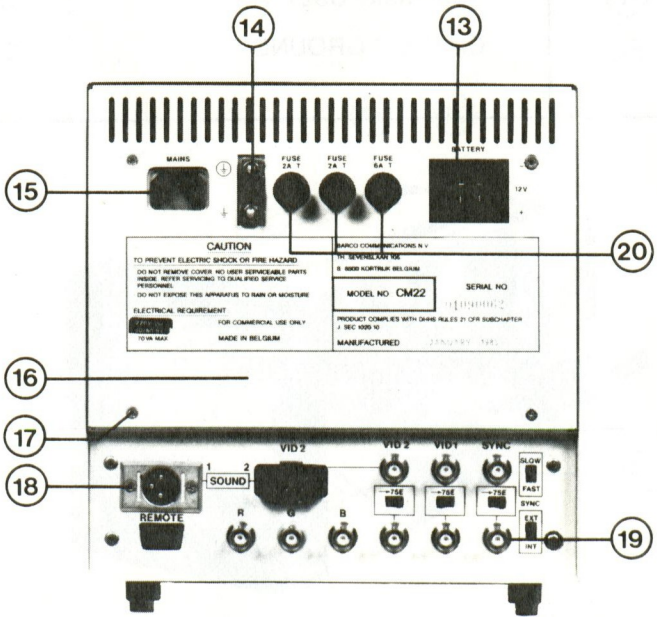

CRT DATABASE

Nr.	Description	Ref. nr.
(21)	FRONT CHASSIS	C 600118
(22)	CHASSIS SIDE RIGHT	C 600100
(23)	CHASSIS SIDE LEFT	C 600099
(24)	HANDLE	C 600151
(25)	FIX HANDLE	C 600098
(26)	SCREW : M3x20	C 362127
	PLASTIC SPACER 12.7	C 368408
	METAL SHEET	C 600149
(27)	CLIP	C 313339
(28)	REAR CHASSIS	C 600117
(29)	HEATSINK	C 600017
(30)	CLIP	C 313340
(31)	GROUND COVER	C 600087
(32)	SMP M3x6 D921	C 362668
(33)	CLIP FOR RGB	C 313341
(34)	SCREENING P.T.	C 600138
(35)	FIXATION SCREENING	C 600146
(36)	AQUADAG UNIT	C 660088
(37)	DEGAUSSING COIL	C 670010
(38)	BUSCHING ø 38	C 313328
(39)	CLIP	C 412625
(40)	FIX HANDLE	C 600098
(41)	HANDLE	C 600151
(42)	SMP M3x6 D921	C 362668
(43)	CHASSIS GROUND	C 600086

CRT DATABASE

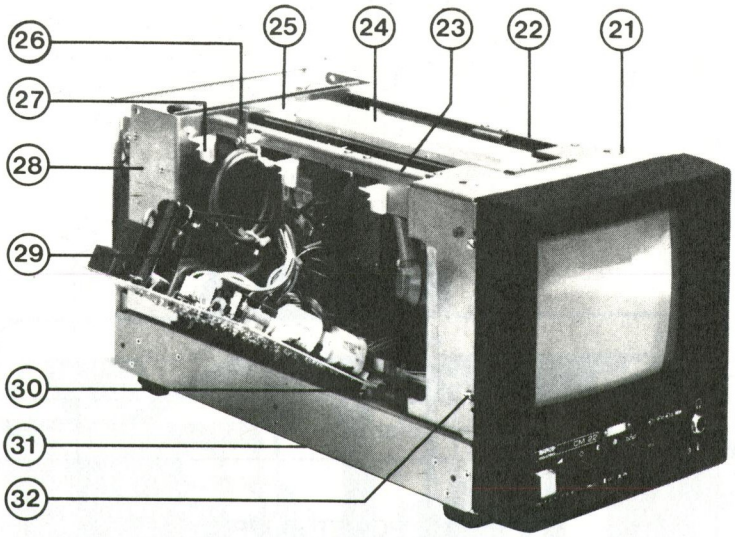

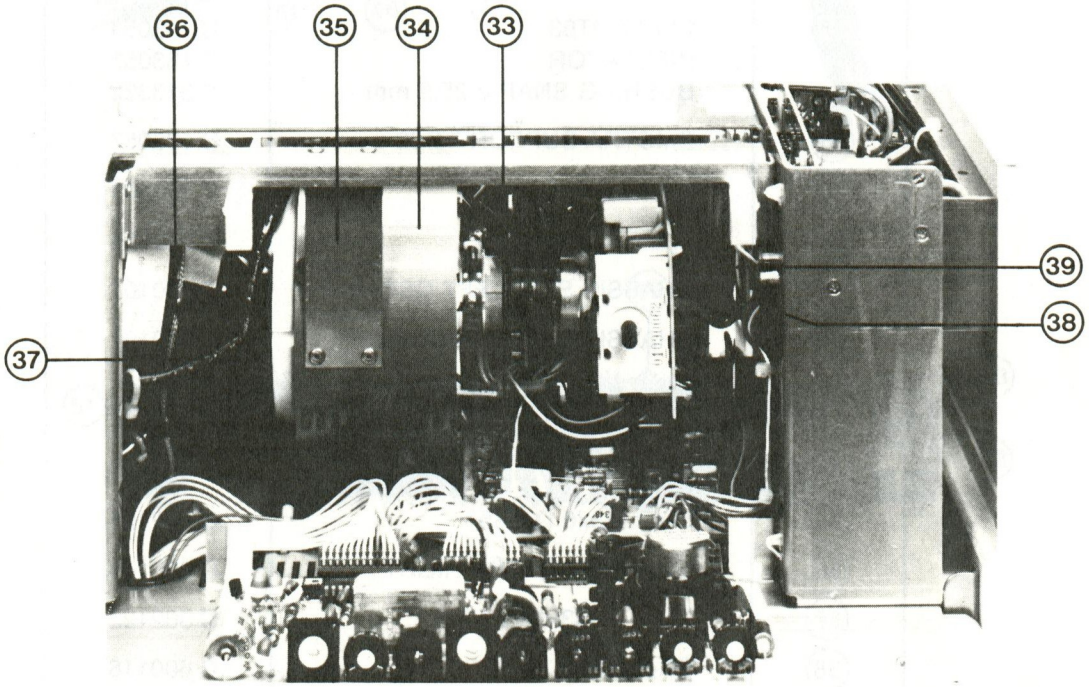

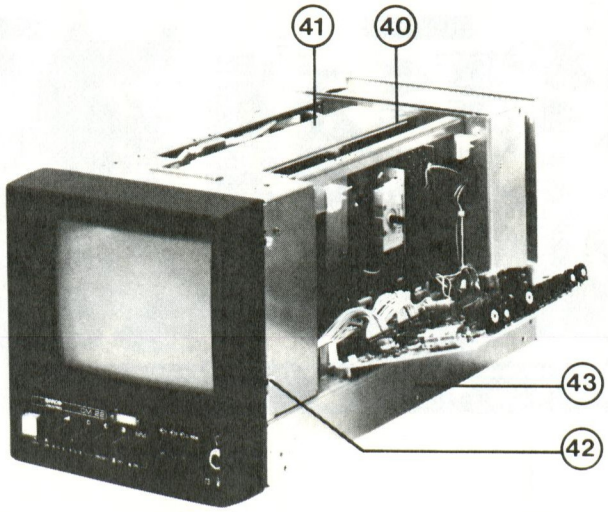

CRT DATABASE

Nr.	Description	Ref. nr.
(44)	FRAME POWER SUPPLY	C 600131
(45)	CLIP TO 126	C 133032
(46)	HEATSINK PS	C 600144
(47)	CLIP SOT93 INSULATOR BUSHING SNAP ø 25,5 mm	C 133054 C 133055 C 313332
(48)	SMCTRA SUPPORT T 03	C 133057
(49)	SMP 2,9x6,5	C 363601
(50)	FIXATION POTM	C 600106
(51)	CHASSIS SIDE LEFT CSB	C 600107
(52)	CHASSIS SIDE RIGHT CSB	C 600107
(53)	SMP + M M3x6 WASHER LA 3.2	C 362121 C 367502
(54)	CHASSIS I/O SIDE LEFT	C 600109
(55)	SMP M3x6 D7985	C 362121
(56)	CHASSIS I/O SIDE RIGHT	C 600143
(57)	SMP + M3x20 D7985	C 362122
(58)	FRONTPLATE I/0	C 600116
	ALL NUTS	C 366102

CRT DATABASE

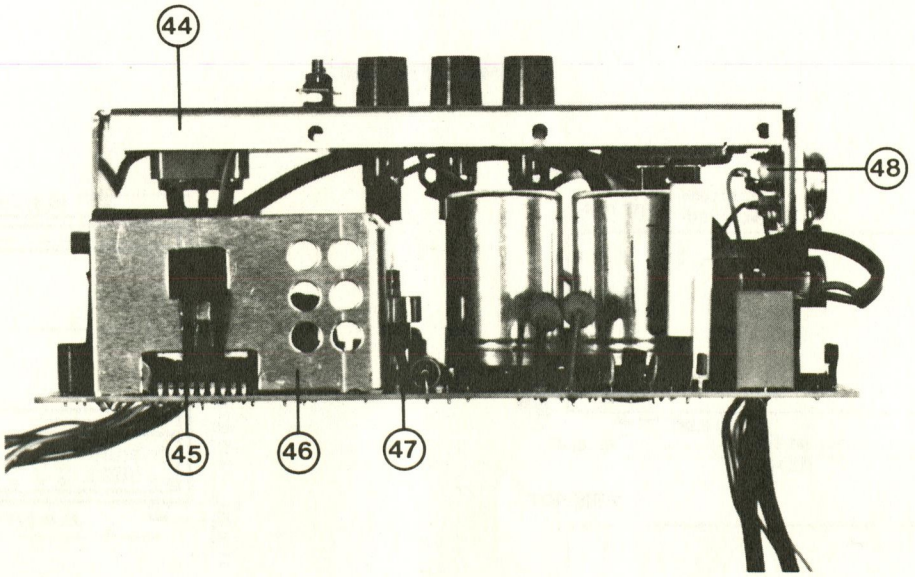

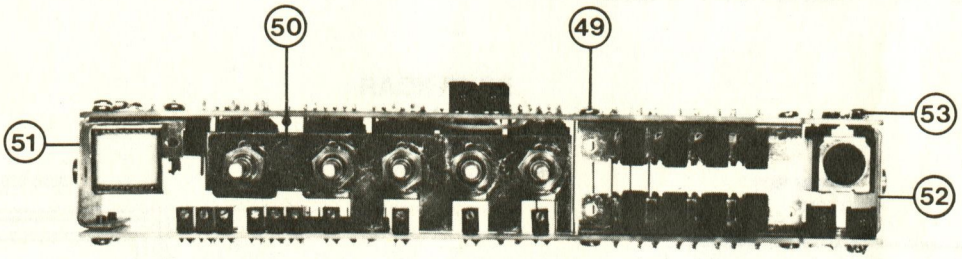

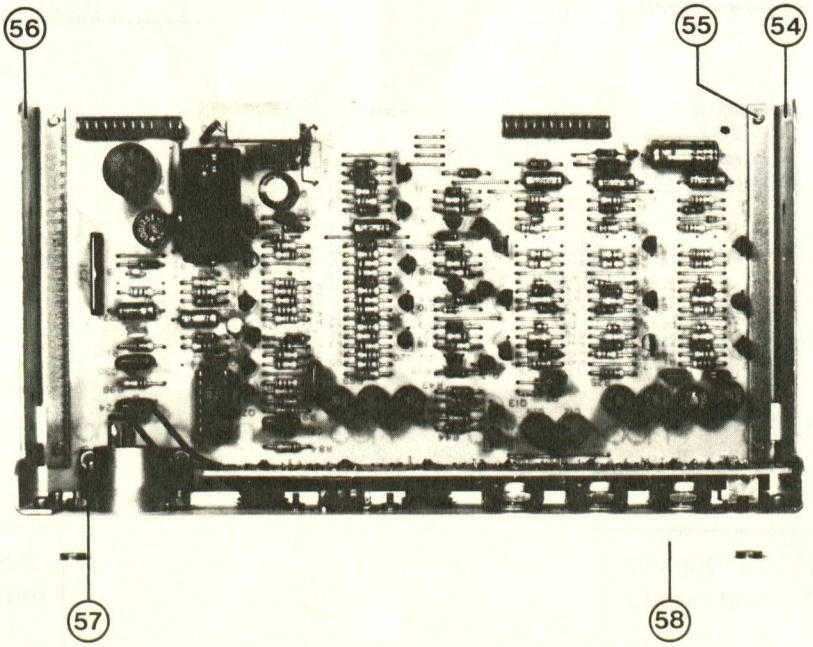

CRT DATABASE

PART IV : DIMENSIONS WEIGHT

CABINET TYPE

FRONT VIEW

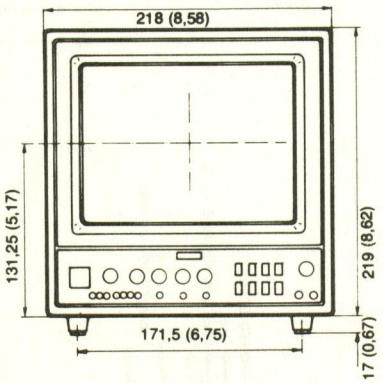

SIDE VIEW

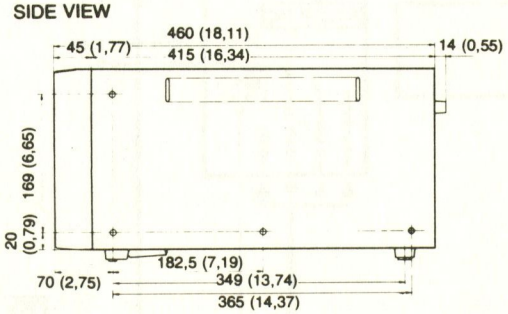

TOP VIEW

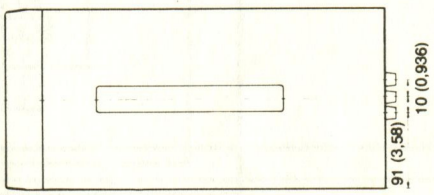

RACK TYPE

FRONT VIEW

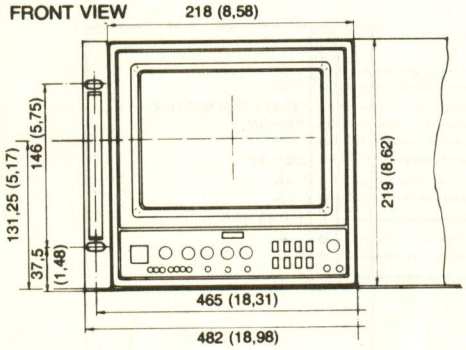

TOP VIEW

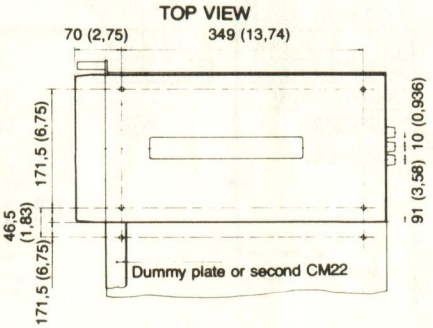

RACK TYPE
SIDE VIEW

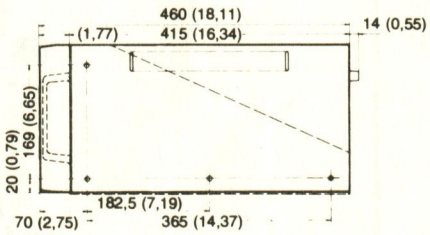

DIMENSIONS mm (inch)

Carton dimensions :
328 x 298 x 568 mm
(H x W x D).

Weight net : 10 kg.
Export brut : 13 kg.

CRT DATABASE

INTERCONNECTION DIAGRAM

P POWER SUPPLY BOARD C660081

H HOR. DEFLECTION BOARD C660078

V VERT. DEFLECTION BOARD C660080 C66

R RGB BOARD C660082

C CRT SOCKET

I INPUT OUTPUT BOARD C660085

D VIDEO PROCESSING BOARD

PAL DECODER CM22	C660084
NTSC DECODER COMB CM22	C660132

F FRONT PANEL CONTROL BOARD C660083

EHT TRAFO & TRIPLER

LOUDSPEAKER

QUAD ONLY OR NTSC

DEFLECTION COILS

EHT

DEGAUSSING

MAINS INPUT

MODIFICATIONS RESERVED

7-2-83

WIRING DIAGRAM CM22

SECTION VI : UNITS

In this section we will describe for each unit :

- component location
- diagram
- circuit description
- adjustment procedure
- partslist

The units are taken in following sequence :

POWER SUPPLY UNIT	C660081
VERTICAL DEFLECTION UNIT	C660080
HORIZONTAL DEFLECTION	C660078
INPUT OUTPUT UNIT	C660085
CONTROL AND SWITCH BOARD	C660083
PAL DECODER UNIT	C660084
NTSC DECODER UNIT	C660132
RGB OUT UNIT	C660082
CRT SOCKET UNIT	C660079

CRT DATABASE

Power Supply Unit C660081

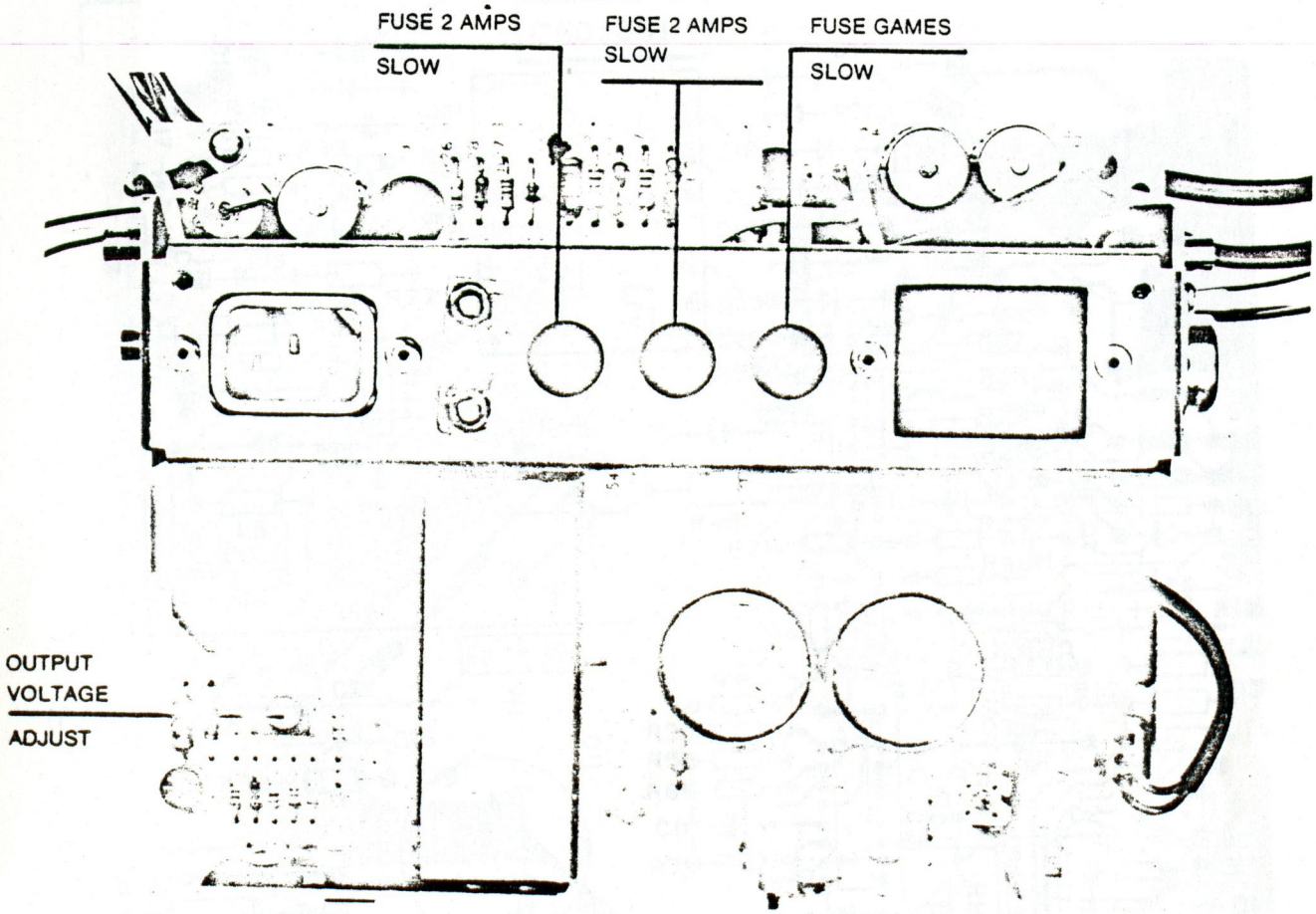

UNIT t° SENSOR

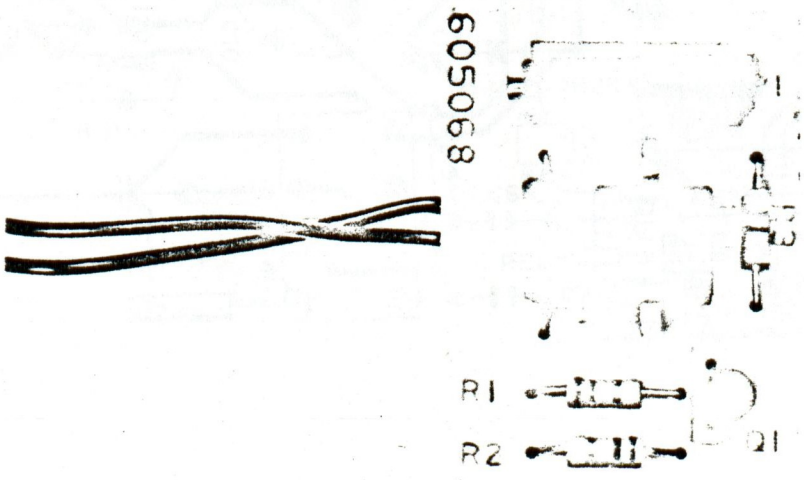

CRT DATABASE

1) 586 MA
2) 572.3 MA
3) 566.3 MA

SR50 FUSIBLE RESISTOR

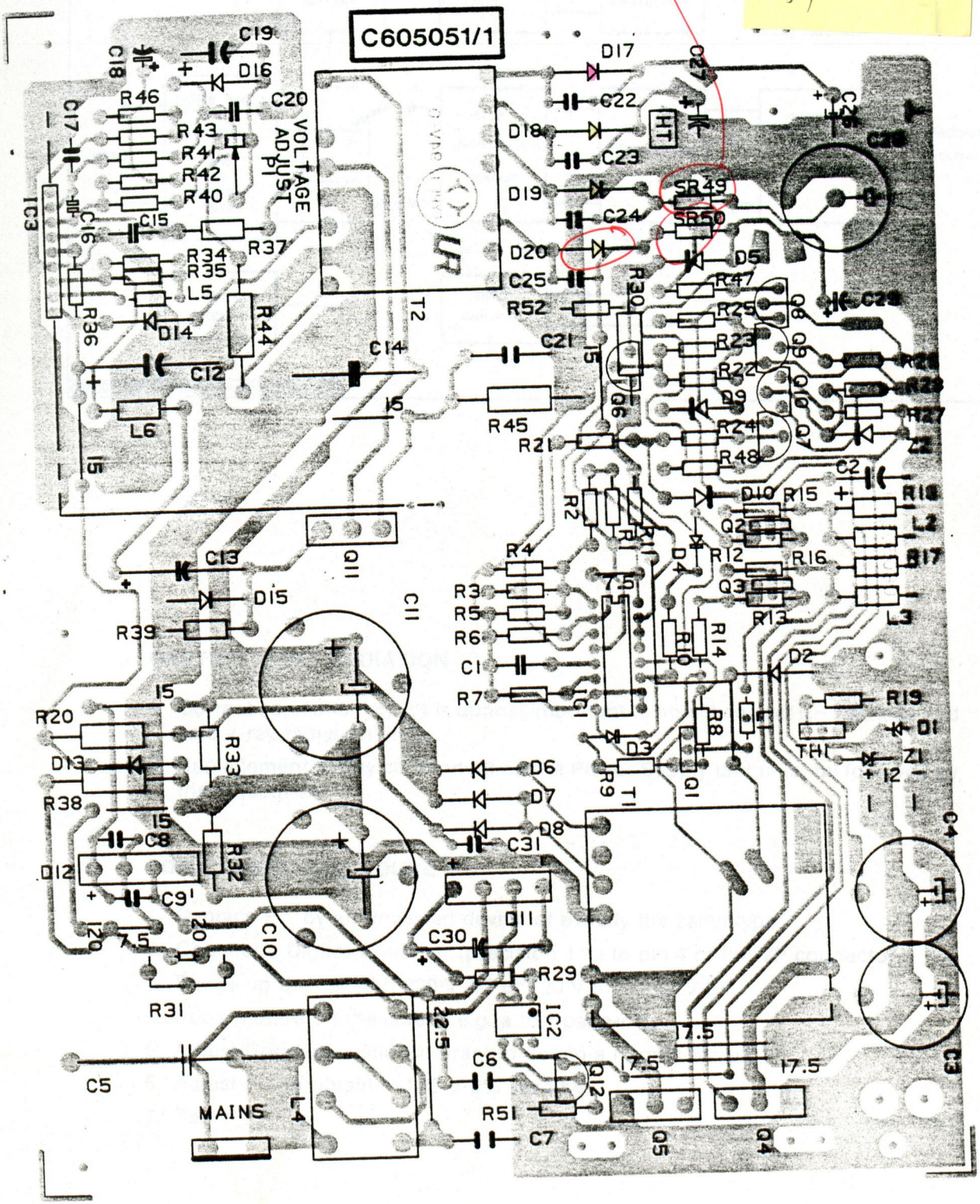

CRT DATABASE

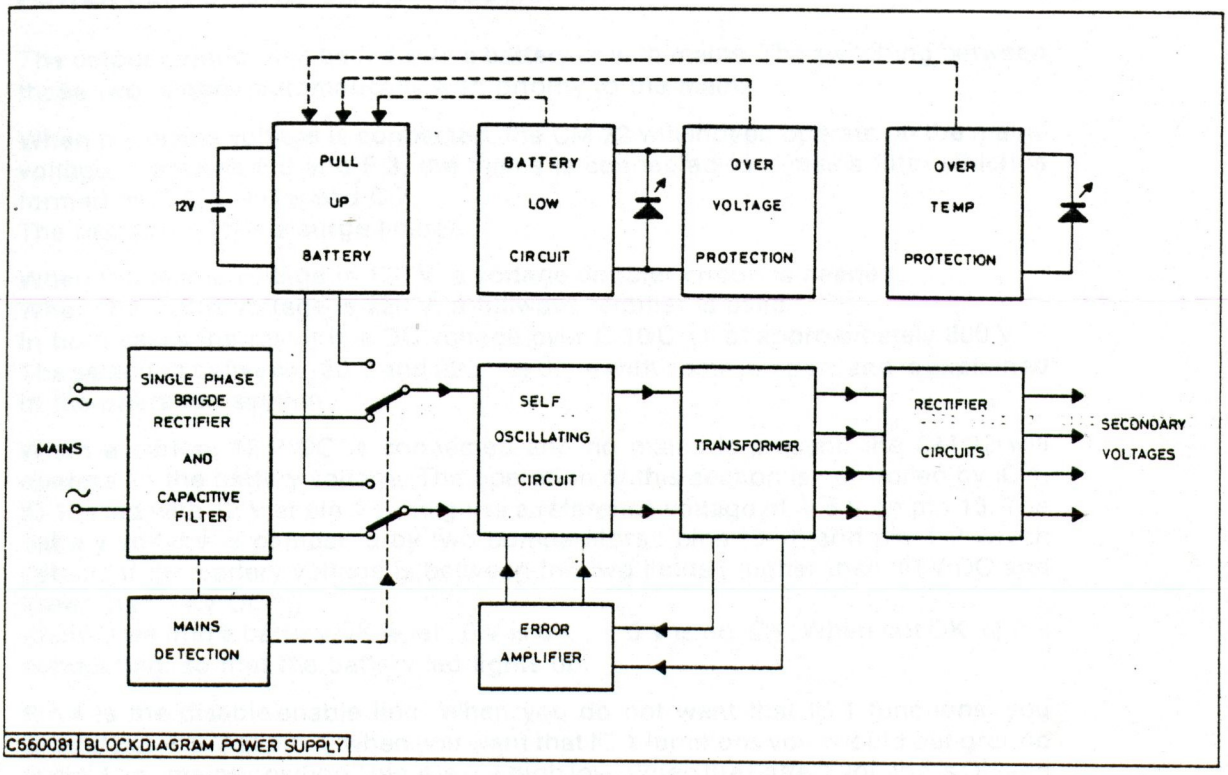

C560081 BLOCKDIAGRAM POWER SUPPLY

CAUTION X-RAY RADIATION

1. Correct adjustment of P 1 is utmost important to obtain correct EHT voltage and safe x-ray radiation limits.
2. Replacement of any component on the Power Supply unit must be followed by the adjustment !

ADJUSTMENT PROCEDURE

1. Replace P 1 by an unsealed device of exactly the same type.
2. Connect a Digital voltmeter (precision 1%) to pin 4 of the VP connector.
3. Power up the set with 220 V AC or 120 V AC or 12 V DC.
4. Put a picture on the screen e.g. a test pattern.
5. Adjust Brightness and Contrast to obtain a normal picture.
6. Adjust P 1 to obtain + 105 ± 2% reading.
7. Seal P 1.

CRT DATABASE

POWER SUPPLY UNIT CM 22 — DESCRIPTION

The colour monitor can be fed with a battery or with mains. The switching between those two is done automatically with priority to the mains.

When the mains voltage is connected, the CM 22 will indeed operate on the mains voltage. Via fuses F 2 and F 3, the mains is connected to a mains filter which is formed by C 5, L 4 C 6 and C 7.
The resistor R 31 is a surge limiter.

When the mains voltage is 120 V, a voltage doubler circuit is needed.
When the mains voltage is 220 V, a fullwave rectifier is used.
In both cases the result is a DC voltage over C 10/C 11 of approximately 300 V.
The selection between 120 V and 220 V is done with some jumpers and is explained in the operation section.

When a battery 12 V DC is connected and no mains is present, the CM 22 will operate on the battery voltage. The operation of this section is controlled by IC 1. IC 1 is fed with 12 V at pin 12 and gives a reference voltage of + 5 V on pin 13. The battery voltage is compared by two comparators : pins 15-16 and pin 1-2 which detects if the battery voltage is between the two limits : higher then 10 V DC and lower then 14 V DC.
At pin 3 we find a battery OK level : 0 V is OK ; + 5 V is not OK. When not OK, Q 7 is conducting, so that the battery led lights up.

Pin 4 is the disable/enable line. When you do not want that IC 1 functions, you should put + 5 V at pin 4, when you want that IC 1 functions you should put ground at pin 4. In „mains position" pin 4 is put high low. When the battery voltage is OK and no mains is available pin 4 is put low via Q 6. Q 6 is driven by the on/off switch, R 25 and R 23.

The conducting of Q 6 can be stopped when mains is detected via IC 2/Q 12 or when the temperature became to high so that Q 9 conducts. A led on the frontpanel lights up via Q 8 (see later).

When pin 4 of IC 1 is low means that everything has been detected as „normal". The frequency of the internal oscillator in IC 1 is fixed by R 7 and C 1. It drives the transistors Q 2/Q 4 and Q 3/Q 5 (output on pin 8 and 11 ; opposite phase).

The circuit Q 1 - D 2 - C 1 - C 2 delivers an auxiliary voltage for Q 2 - Q 3 operation.

The push/pull action of the circuit around Q 4 and Q 5 causes an AC current through transformer T 1.
The voltage secondary side is rectified by D 6 and D 7, and smoothed by C 10 and C 11.

The DC voltage over C 10/C 11 (either from mains or from the battery pull up circuit) is now connected with the circuit built around IC 3 and Q 11. The operation of this part depends on a selfoscillating circuit. The frequency of the oscillation depends on the input voltage and the load.

The transistor Q 11 is placed in series with the primary of transformer T 2. When the transistor conducts, the primary winding will store energy. When the transistor blocks, the energy in the transformer is delivered via the secondary windings to the load.

Overvoltage protection, oscillation and output voltage correction is done by IC 3. The secondary output voltages are rectified and smoothed.

The temperature sensor is mounted at the rear of the chassis. When the temperature becomes to high the output of = IC 1 (LM 3911) becomes high and so drives Q 8 and Q 9. This results that the t°-led on the front panel lights up and that via Q 6, IC 1 becomes disactivated.

Transistor Q 10 and zenerdiode Z 2 is current source for IC 1. The voltage for those components is delivered from the 17 V output via D 5 and R 30 or from battery supply.

CRT DATABASE

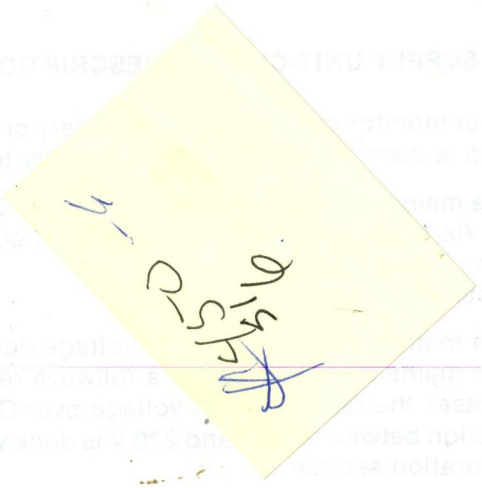

SK 3081
ECG 125
Cross Ref

SR 50 fusable
Blows along w/

D-20 HA
a few tim
Time I Re
a Larger
Diode ad
V. Deflection
as a reso
1) What can h
D-20 overl
2) You'll probab
V. DEF before
#1)

CM
S/N 1
JAN

TELEVISION Electrain 9-5:30 453-6611
Sat 9-12 AM

CRT DATABASE

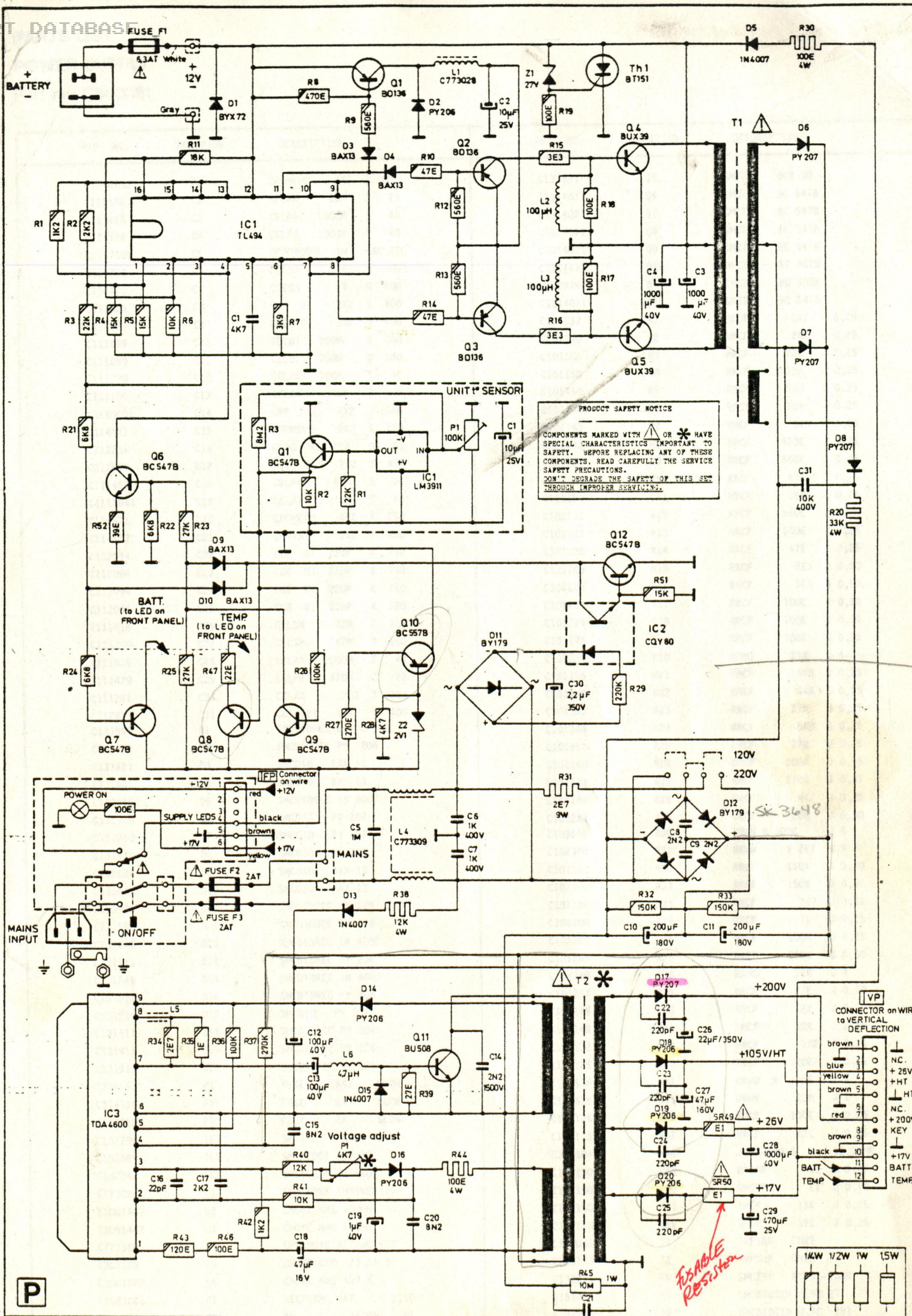

C660081 UN. SM POWER SUPPLY CM22

MODIFICATIONS RESERVED

R	1, 2,3,21,24, 4, 5,22,52, 6,23,25,34,43,11,35,47,36,46,37,42, 3,2,7,8, 40,41,26,28,27,P1, 9,1, 10,14,38,39,12,13,P1, 44, 19,15,16,31, 7, 45,29, 32, 33, 49,50, 30, 20,
C	16 17 1 12,15,18,13, 19,5, 20, 6,7, 14, 1,2, 30, 10, 4,22,23, 3,24,25,8,9,11,26,27, 28, 29,
Q	6,7, 8 9,1, 1 10 11 2,3, 4,5,12,

2-2-83

CRT DATABASE

PARTS LIST

POWER SUPPLY

Part nr.: C660081

REF. NR.	POSITION	DESCRIPTION
C1140263	C1	CPOMEPO 4K7 J 100
C111156	C2	CELAX 10M Z 25
C111626	C3	CELRA 1000M T 40
C111626	C4	CELRA 1000M T 40
C1147169	C5	CPO9ROOUL 1M KAC 250
C114720	C6	CCESA Y 1K M 400
C114720	C7	CCESA Y 1K M 400
C112829	C8	CCE DI 2K2 S 400
C112829	C9	CCE DI 2K2 S 400
C111699	C10	CELBI 200M Q 180
C111699	C11	CELBI 200M Q 180
C111190	C12	CELAX 100M T 40
C111190	C13	CELAX 100M T 40
C1150051	C14	CPP 2K2 J 1500
C114521	C15	CPOMEPO 8K2 K 250
C112234	C16	CNPO MI 22P G5 63
C112829	C17	CCE DI 2K2 S 400
C111465	C18	CELPR 47M Z 16
C1111841	C19	CELAX 1M T 40
C114521	C20	CPOMEPO 8K2 K 250
C114722	C21	CMAINS 2K2 Y 400
C112094	C22	CCE DI 220P K 750
C112094	C23	CCE DI 220P K 750
C112094	C24	CCE DI 220P K 750
C112094	C25	CCE DI 220P K 750
C111418	C26	CELSN 22M T 350
C111399	C27	CELSN 47M T 160
C111626	C28	CELRA 1000M T 40
C111479	C29	CELPR 470M Z 25
C111261	C30	CELAX 2M2 T 350
C112837	C31	CCE DI 10K S 400
C131949	D1	SMCDIOREC BYX72-150
C131911	D2	SMCDIOREC PY 206
C131621	D3	SMCDIO BAX 13
C131621	D4	SMCDIO BAX 13
C131646	D5	SMCDIOREC 1N 4007
C131910	D6	SMCDIO PY 207
C131910	D7	SMCDIO PY 207
C131910	D8	SMCDIO PY 207
C131621	D9	SMCDIO BAX 13
C131621	D10	SMCDIO BAX 13
C131950	D11	SMCDIOREC BY 179
C131950	D12	SMCDIOREC BY 179
C131646	D13	SMCDIOREC 1N 4007
C131911	D14	SMCDIOREC PY 206
C131646	D15	SMCDIOREC 1N 4007
C131911	D16	SMCDIOREC PY 206
C131910	D17	SMCDIO PY 207
C131911	D18	SMCDIOREC PY 206
C131911	D19	SMCDIOREC PY 206
C131911	D20	SMCDIOREC PY 206
C314145	F1	FUSE 6A3 SLOW
C314116	F2	FUSE 2A SLOW
C314116	F3	FUSE 2A SLOW
C137296	IC1	SMCICL TL494
C131699	IC2	SMCOEOCI CQY 80
C132747	IC3	SMCICLSM TDA4600
C773028	L1	SPOCHOKE SMPOWER 31
C3061442	L2	CHOKE NMS 100MH
C3061442	L3	CHOKE NMS 100MH
C773309	L4	SPOCHOKE NETBWCTV32
C302108	L5	CHORE CHO 1/3,5X 3
C3061282	L6	CHOKE NMS 4U7 K
C1061061	P1	RECP10H 4K7 M 0,10
C605051	PC	PC -C660081 01
C131434	Q1	SMCTRA BD 136
C131434	Q2	SMCTRA BD 136
C131434	Q3	SMCTRA BD 136
C132531	Q4	SMCTRA BUX 39

REF. NR.	POSITION	DESCRIPTION
C132531	Q5	SMCTRA BUX 39
C1314071	Q6	SMCTRA BC 547B
C1314071	Q7	SMCTRA BC 547B
C1314071	Q8	SMCTRA BC 547B
C1314071	Q9	SMCTRA BC 547B
C1314131	Q10	SMCTRA BC 557B
C132574	Q11	SMCTRA BU 508A
C1314071	Q12	SMCTRA BC 547B
C101137	R1	RRCF 1K2 J 0,25
C101140	R2	RRCF 2K2 J 0,25
C101152	R3	RRCF 22K J 0,25
C101150	R4	RRCF 15K J 0,25
C101150	R5	RRCF 15K J 0,25
C101148	R6	RRCF 10K J 0,25
C101143	R7	RRCF 3K9 J 0,25
C101132	R8	RRCF 470E J 0,25
C101133	R9	RRCF 560E J 0,25
C101120	R10	RRCF 47E J 0,25
C101151	R11	RRCF 18K J 0,25
C101133	R12	RRCF 560E J 0,25
C101133	R13	RRCF 560E J 0,25
C101120	R14	RRCF 47E J 0,25
C101206	R15	RRCF 3E3 J 0,50
C101206	R16	RRCF 3E3 J 0,50
C101224	R17	RRCF 100E J 0,50
C101224	R18	RRCF 100E J 0,50
C101124	R19	RRCF 100E J 0,25
C103354	R20	RRMO 33K J 4
C101146	R21	RRCF 6K8 J 0,25
C101146	R22	RRCF 6K8 J 0,25
C101153	R23	RRCF 27K J 0,25
C101146	R24	RRCF 6K8 J 0,25
C101153	R25	RRCF 27K J 0,25
C101160	R26	RRCF 100K J 0,25
C101129	R27	RRCF 270E J 0,25
C101144	R28	RRCF 4K7 J 0,25
C101264	R29	RRCF 220K J 0,50
C103636	R30	RRWW H 100E J 4
C104309	R31	RRWW V 2E7 K 9
C101262	R32	RRCF 150K J 0,50
C101262	R33	RRCF 150K J 0,50
C101105	R34	RRCF 2E7 J 0,25
C101100	R35	RRCF 1E J 0,25
C101160	R36	RRCF 100K J 0,25
C101265	R37	RRCF 270K J 0,50
C103349	R38	RRMO 12K J 4
C101217	R39	RRCF 27E J 0,50
C101149	R40	RRCF 12K J 0,25
C101148	R41	RRCF 10K J 0,25
C101137	R42	RRCF 1K2 J 0,25
C101125	R43	RRCF 120E J 0,25
C103636	R44	RRWW H 100E J 4
C1046781	R45	RRHV 10M J 1
C101124	R46	RRCF 100E J 0,25
C101116	R47	RRCF 22E J 0,25
C348104	48	JUMPER 0,6 12,5MM
C1011907	R49	RRCFF E1 J 0,40
C1011907	R50	RRCFF E1 J 0,40
C101150	R51	RRCF 15K J 0,25
C101119	R52	RRCF 39E J 0,25
C670008	T1	TRF12V CM22
C306723	T2	TRFSUP CM22
C132213	TH1	SMCTHY BT151-500R
C131765	Z1	SMCDIOZEN 0,5B 27
C131733	Z2	SMCDIOZEN 0,4C 2V1
C660081D	-	WIRE TREE -C660081
C313638	-	CONMOPSE 12V
C3131309	-	CONMOCTE MAINS UL6A
C314507	-	FUSE HOLDER SOCKET

CRT DATABASE

Vertical Deflection Unit C660080

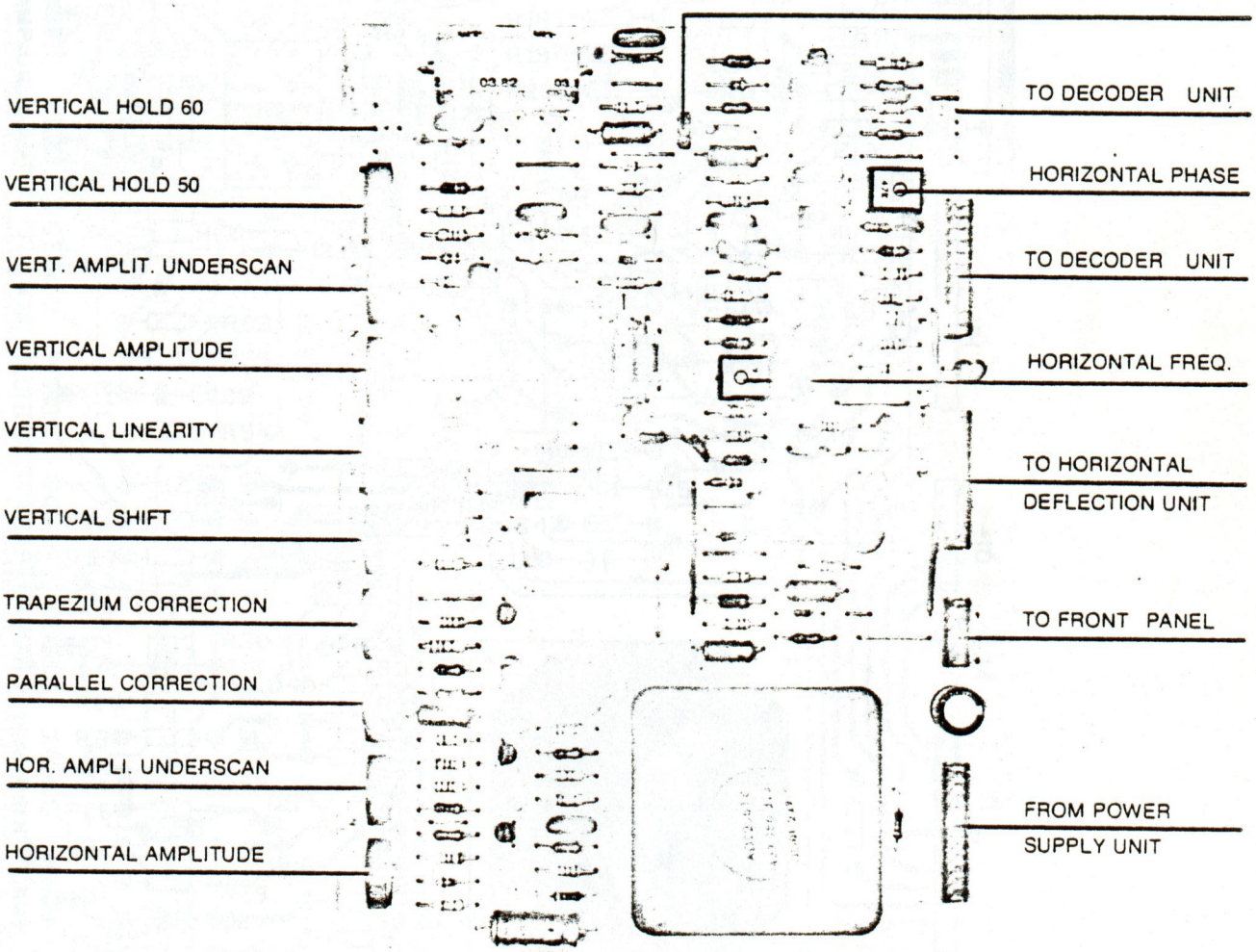

CRT DATABASE

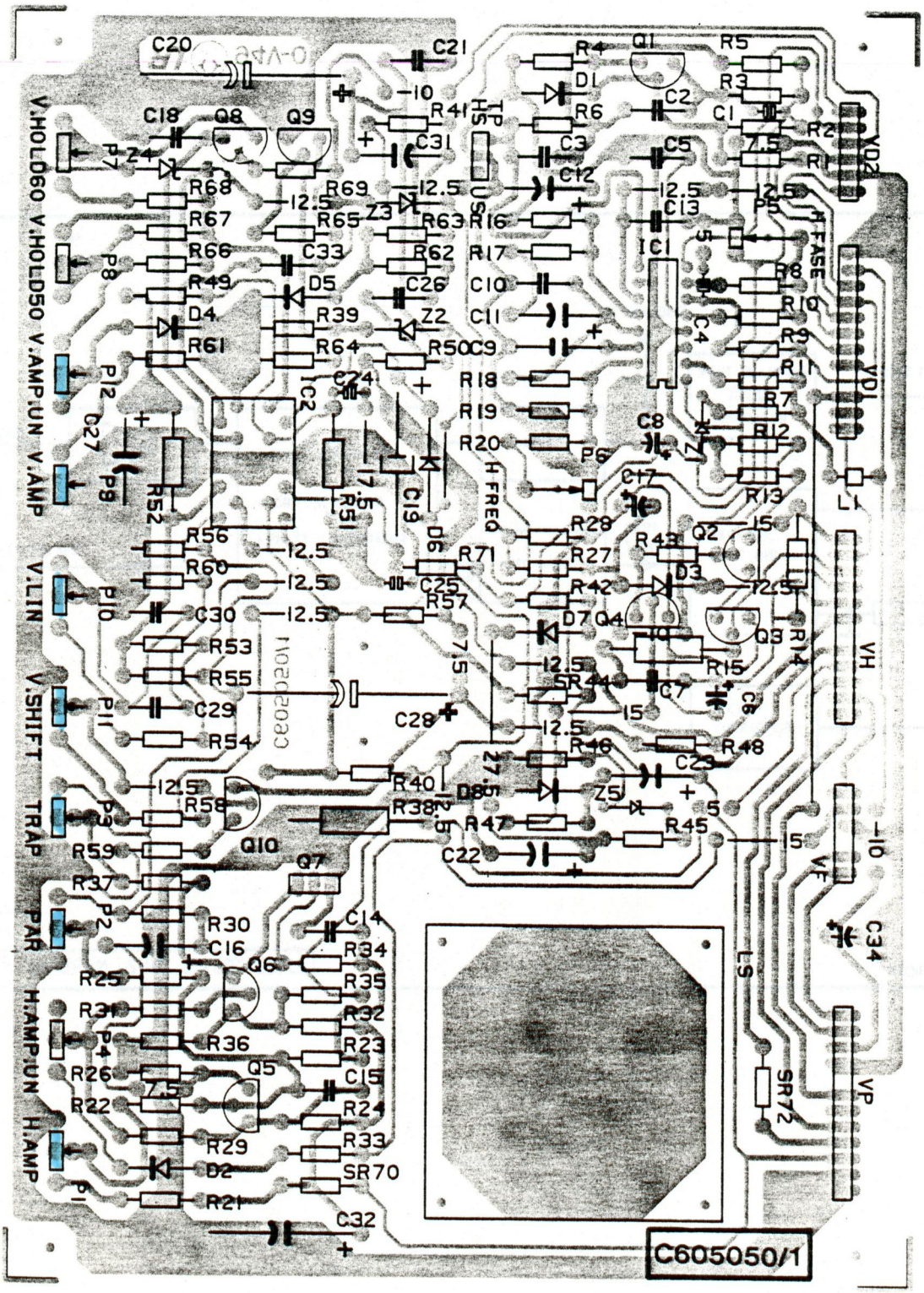

CRT DATABASE

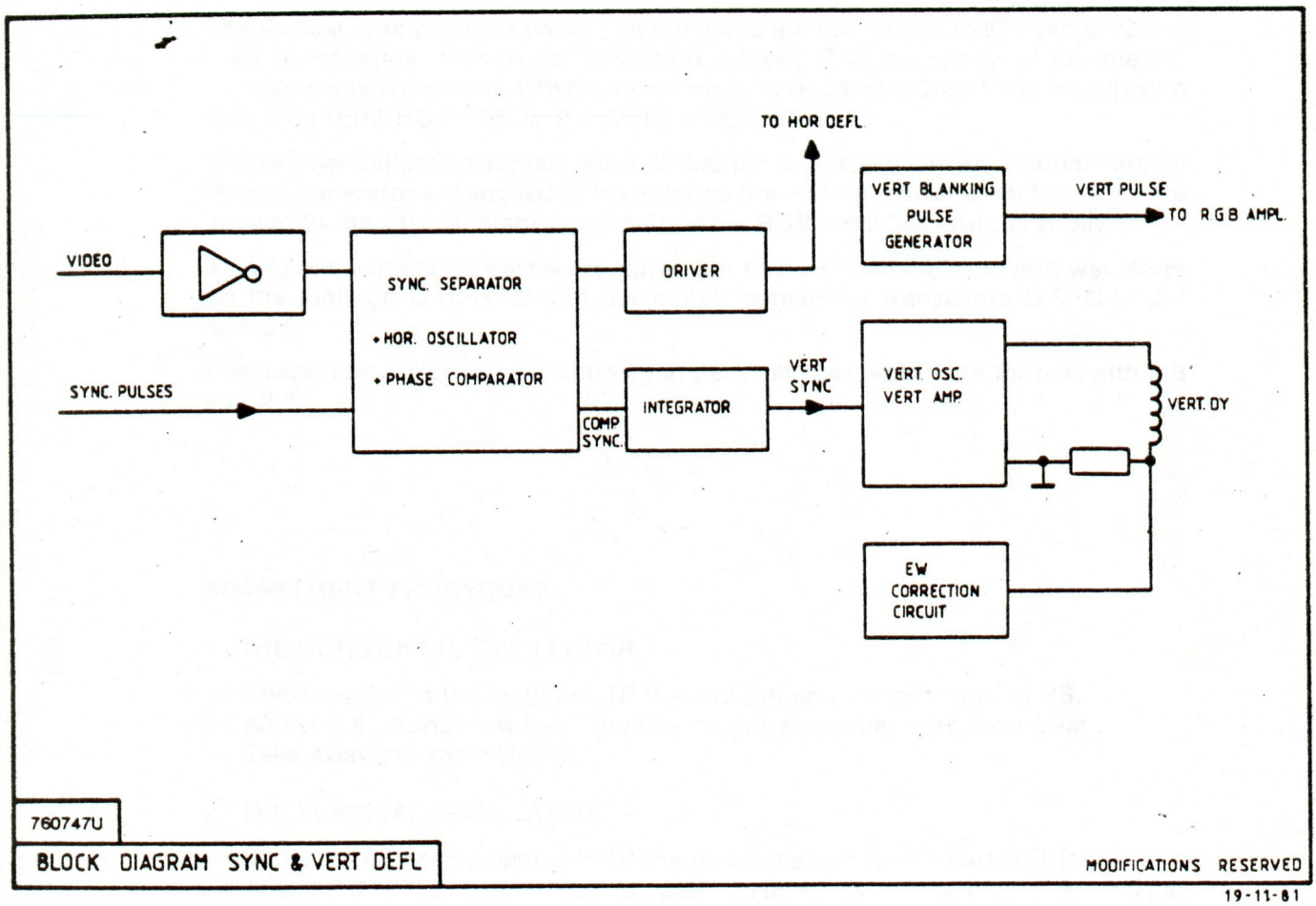

CRT DATABASE

SYNC. & VERTICAL DEFLECTION UNIT DESCRIPTION

The sync and vertical deflection unit is built around two IC's : TDA 2593 and TDA 1170.
The video signal, which contains the synchronisation information, enters the unit at pin 8 of connector VD 1.

Transistor Q 1 inverses the incoming videosignal which enters IC 1 at pin 9. That IC separates the vertical and horizontal sync signals. The IC contains an oscillator which is controlled by two phase comparators comparing on the one hand the separated sync pulse and on the other hand the line flyback pulse from the horizontal deflection unit. This to adjust the internal horizontal oscillator.

The horizontal drive pulses leave IC 1 at pin 3 and drive transistor Q 3 which in turn drive the horizontal deflection transistor on the horizontal deflection board. Q 2 and Q 4 form a protection circuit : no vertical deflection disactivates the EHT generator and horizontal deflection circuit.

The vertical sync pulses leave IC 1 at pin 8 and are connected to IC 2 pin 8. IC 2 is used to generate the vertical deflection current. The frequency of its internal oscillator is synchronised with the incoming sync signal (pin 8) and may be adjusted with P 8 (VERT HOLD 50) or P 7 (VERT HOLD 60).

The vertical deflection signals leave IC 2 at pin 4. Pulses from an internal vertical flyback generator are applied to the yoke via the internal power amplifier. They are applied to the vertical blanking circuit or the RGB amplifier (output at pin 3).

A parabolic voltage for east-west correction formed from the sawtooth waveform on the junction C 28-R 56 with the circuit containing transistors Q 5, Q 6, Q 7 and Q 9.

The trapezium distortion correction and parabolic correction are formed with P 3 and P 2.

ADJUSTMENT PROCEDURE

1. THE HORIZONTAL OSCILLATOR

— Short circuit on the testpoint TP the mid pin and the pin marked HS.
— Adjust P 6 „Horizontal freq" in order to get a minimal horizontal beat.
— Take away the short circuit.

2. THE VERTICAL OSCILLATOR

— Short circuit on the testpoint TP the mid pin and the pin marked VS.
— Adjust P 8 (P 7) „vertical hold" to optain an upwards vertical beat of 3 turns per second approximately.
— Take away the short circuit.
— Adjust P 5 „Horizontal phase" to center the picture on the screen.

3. GEOMETRY ADJUSTMENTS

— It is advisable to use a test pattern.
— In overscan :
  - The horizontal amplitude is adjusted by means of P 1 (hor. amp.).
  - Horizontal parabolic deformation is corrected with P 2 (par.).
  - Horizontal trapezoidal deformation is corrected with P 3 (trap.).
  - The vertical amplitude can be adjusted by means of P 9 (vert. ampl.).
  - The vertical linearity is adjusted by means of P 10 (vert. lin.).
  - The vertical shift is done with P 11 (vert. shift).
— In underscan :
  - Vertical amplitude is adjusted by means of P 12 (vert. ampl. UN).
  - Horizontal amplitude is adjusted by means of P 4 (hor. ampl. UN).

CRT DATABASE

WANTED FOR
IC 4502 5V REG ONE
H:F: PACK

IC1 = NTE 7001

CRT DATABASE

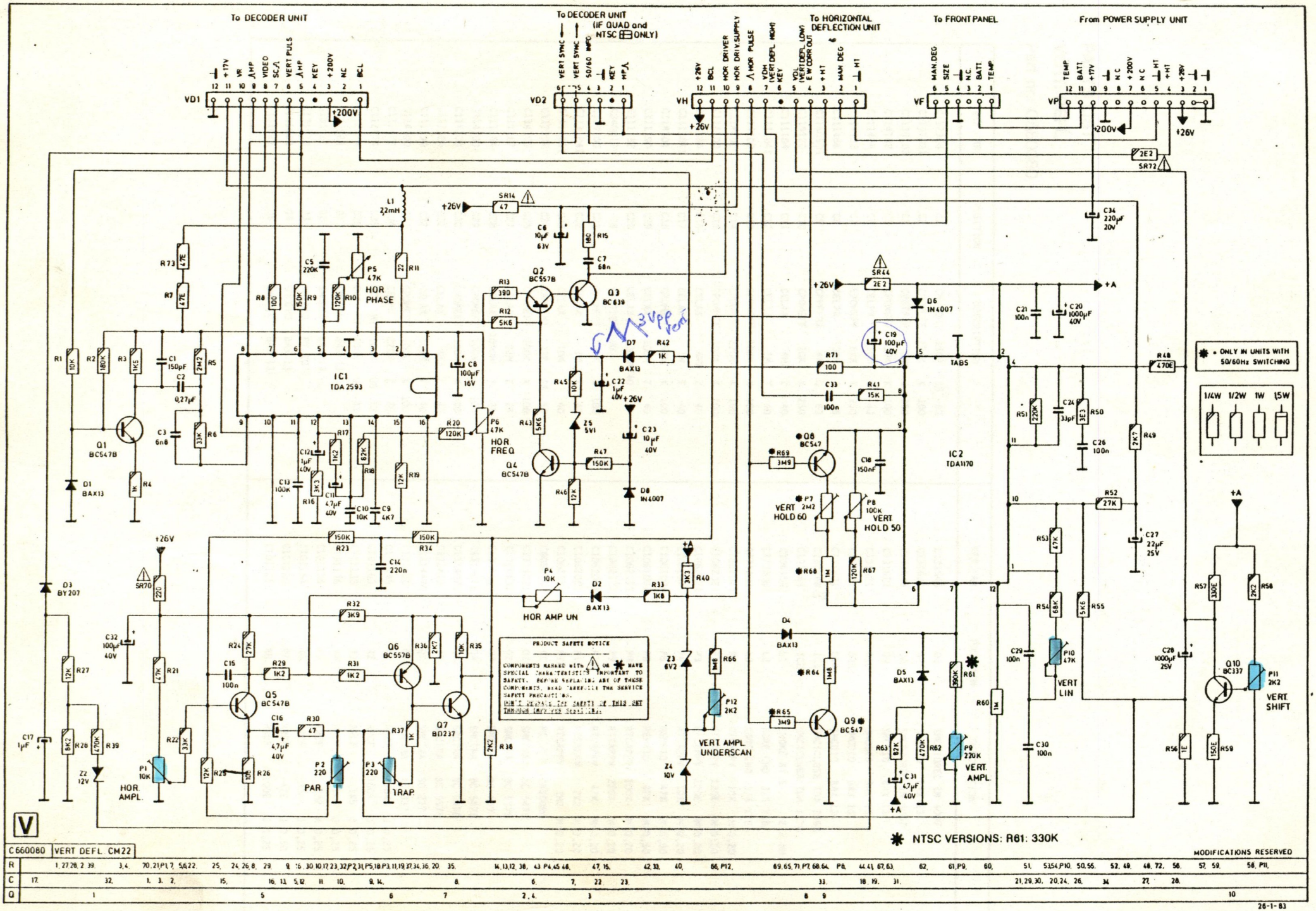

CRT DATABASE

PARTS LIST

VERT. DEFL.

Part nr.: C660080

REF. NR.	POSITION	DESCRIPTION
C112364	C1	CN750MI 150P G5 63
C1141031	C2	CPOMEFF 270K K 100
C1139102	C3	CPETPEP 6K8 J 250
C114102	C5	CPOMEFF 220K K 100
C111494	C6	CELPR 10M Z 63
C114130	C7	CPOMEFF 68K K 250
C111466	C8	CELPR 100M Z 16
C1160505	C9	CPPFFRA 4K7 G 63
C114120	C10	CPOMEFF 10K K 250
C111184	C11	CELAX 4M7 Z 40
C1111841	C12	CELAX 1M T 40
C114100	C13	CPOMEFF 100K K 100
C114102	C14	CPOMEFF 220K K 100
C114100	C15	CPOMEFF 100K K 100
C111184	C16	CELAX 4M7 Z 40
C1111841	C17	CELAX 1M T 40
C114101	C18	CPOMEFF 150K K 100
C111190	C19	CELAX 100M T 40
C111182	C20	CELAX 1000MT40
C348019	19	WIRTIE L100
C114100	C21	CPOMEFF 100K K 100
C1111841	C22	CELAX 1M T 40
C1111851	C23	CELAX 10M Z 40
C112236	C24	CNPO MI 33P G5 63
C114100	C26	CPOMEFF 100K K 100
C111157	C27	CELAX 22M Z 25
C111164	C28	CELAX 1000M T 25
C114100	C29	CPOMEFF 100K K 100
C114100	C30	CPOMEFF 100K K 100
C111184	C31	CELAX 4M7 Z 40
C111190	C32	CELAX 100M T 40
C114100	C33	CPOMEFF 100K K 100
C111478	C34	CELPR 220M Z 25
C112774	C35	CCE MI 100K U5 63
C112774	C36	CCE MI 100K U5 63
C131621	D1	SMCDIO BAX 13
C131621	D2	SMCDIO BAX 13
C131910	D3	SMCDIO PY 207
C131621	D4	SMCDIO BAX 13
C131621	D5	SMCDIO BAX 13

REF. NR.	POSITION	DESCRIPTION
C131646	D6	SMCDIOREC 1N 4007
C131621	D7	SMCDIO BAX 13
C131646	D8	SMCDIOREC 1N 4007
C131621	D9	SMCDIO BAX 13
C131621	D10	SMCDIO BAX 13
C131621	D11	SMCDIO BAX 13
C131621	D12	SMCDIO BAX 13
C132748	IC1	SMCICLOSE TDA 2593
C132164	IC2	SMCICLWBA TDA 1170
C306159	L1	CHOKE AX S 2,2 MH
C773308	L2	CORE CHO 3/6 X18
C773308	L3	CORE CHO 3/6 X18
C1062071	P1	RTCAPPV 10K M 0,20
C1062021	P2	RTCAPPV 220E M 0,20
C1062021	P3	RTCAPPV 220E M 0,20
C1062071	P4	RTCAPPV 10K M 0,20
C1061094	P5	REMP10 47K M 0,50
C1061094	P6	REMP10 47K M 0,50
C1062111	P8	RTCAPPV 100K M 0,20
C1062121	P9	RTCAPPV 220K M 0,20
C1062091	P10	RTCAPPV 47K M 0,20
C1062051	P11	RTCAPPV 2K2 M 0,20
C1062151	P12	RTCAPPV 2M2 M 0,20
C605050	PC	PC -C660080
C1314071	Q1	SMCTRA BC 547B
C1314131	Q2	SMCTRA BC 557B
C132562	Q3	SMCTRA BC 639
C1314071	Q4	SMCTRA BC 547B
C1314071	Q5	SMCTRA BC 547B
C1314131	Q6	SMCTRA BC 557B
C1314446	Q7	SMCTRA BD 237
C131426	Q10	SMCTRA BC 337
C101148	R1	RRCF 10K J 0,25
C101163	R2	RRCF 180K J 0,25
C101138	R3	RRCF 1K5 J 0,25
C101136	R4	RRCF 1K J 0,25
C101176	R5	RRCF 2M2 K 0,25
C101154	R6	RRCF 33K J 0,25
C101220	R7	RRCF 47E J 0,50
C101124	R8	RRCF 100E J 0,25

CRT DATABASE

PARTS LIST
VERT. DEFL.

REF. NR.	POSITION	DESCRIPTION
C101262	R9	RRCF 150K J 0,50
C101161	R10	RRCF 120K J 0,25
C101116	R11	RRCF 22E J 0,25
C101145	R12	RRCF 5K6 J 0,25
C101131	R13	RRCF 390E J 0,25
C1012209	R14	RRCFFUL 47E J 0,50
C101427	R15	RRCF 180E J 1,50
C101142	R16	RRCF 3K3 J 0,25
C101137	R17	RRCF 1K2 J 0,25
C101159	R18	RRCF 82K J 0,25
C102549	R19	RRMF 12K G 0,25
C101161	R20	RRCF 120K J 0,25
C101156	R21	RRCF 47K J 0,25
C101154	R22	RRCF 33K J 0,25
C101162	R23	RRCF 150K J 0,25
C101153	R24	RRCF 27K J 0,25
C101149	R25	RRCF 12K J 0,25
C101124	R26	RRCF 100E J 0,25
C101149	R27	RRCF 12K J 0,25
C101147	R28	RRCF 8K2 J 0,25
C101137	R29	RRCF 1K2 J 0,25
C101120	R30	RRCF 47E J 0,25
C101137	R31	RRCF 1K2 J 0,25
C101143	R32	RRCF 3K9 J 0,25
C101139	R33	RRCF 1K8 J 0,25
C101162	R34	RRCF 150K J 0,25
C101148	R35	RRCF 10K J 0,25
C101141	R36	RRCF 2K7 J 0,25
C101136	R37	RRCF 1K J 0,25
C101340	R38	RRCF 2K2 J 1
C101168	R39	RRCF 470K J 0,25
C103242	R40	RRMO 3K3 J 1,50
C101150	R41	RRCF 15K J 0,25
C101136	R42	RRCF 1K J 0,25
C101145	R43	RRCF 5K6 J 0,25
C1011049	R44	RRCFFUL 2E2 J 0,25
C101148	R45	RRCF 10K J 0,25
C101149	R46	RRCF 12K J 0,25
C101162	R47	RRCF 150K J 0,25

REF. NR.	POSITION	DESCRIPTION
C101132	R48	RRCF 470E J 0,25
C101141	R49	RRCF 2K7 J 0,25
C101106	R50	RRCF 3E3 J 0,25
C101164	R51	RRCF 220K J 0,25
C101153	R52	RRCF 27K J 0,25
C101156	R53	RRCF 47K J 0,25
C101158	R54	RRCF 68K J 0,25
C101145	R55	RRCF 5K6 J 0,25
C101100	R56	RRCF 1E J 0,25
C101330	R57	RRCF 330E J 1
C101140	R58	RRCF 2K2 J 0,25
C101226	R59	RRCF 150E J 0,50
C101172	R60	RRCF 1M J 0,25
C101167	R61	RRCF 390K J 0,25
C101168	R62	RRCF 470K J 0,25
C101159	R63	RRCF 82K J 0,25
C101175	R66	RRCF 1M8 J 0,25
C101161	R67	RRCF 120K J 0,25
C1011289	R70	RRCFFUL 220E J 0,25
C101124	R71	RRCF 100E J 0,25
C1011049	R72	RRCFFUL 2E2 J 0,25
C101220	Z1	RRCF 47E J 0,50
C131740	Z2	SMCDIOZEN 0,5 C 12
C131720	Z3	SMCDIOZEN 0,5 C 6V2
C131740	Z4	SMCDIOZEN 0,5 C 12
C131716	Z5	SMCDIOZEN 0,5 C 5V1
C313409	-	CONMINIMATCH M2,5-12
C313403	-	CONMINIMATCH M2,5-06
C133053	-	SMC IC COOLER DUAL
C133052	-	SMCTRA COOLER TO220
C133032	-	SMC FIX TO 126
C321032	-	LS 3W 8E 53X 53
C362122	-	SMP M 3 X 8 D7985
C366102	-	NUT M 3 H D 934
C367502	-	WASHER LA 3,2 D6798
C313276	-	CONMOBTE 2,5 P10
C348019	-	WIRTIE L100
C313247	-	CONFOBTE IC P16RM07

CRT DATABASE

Horizontal Deflection

C660078

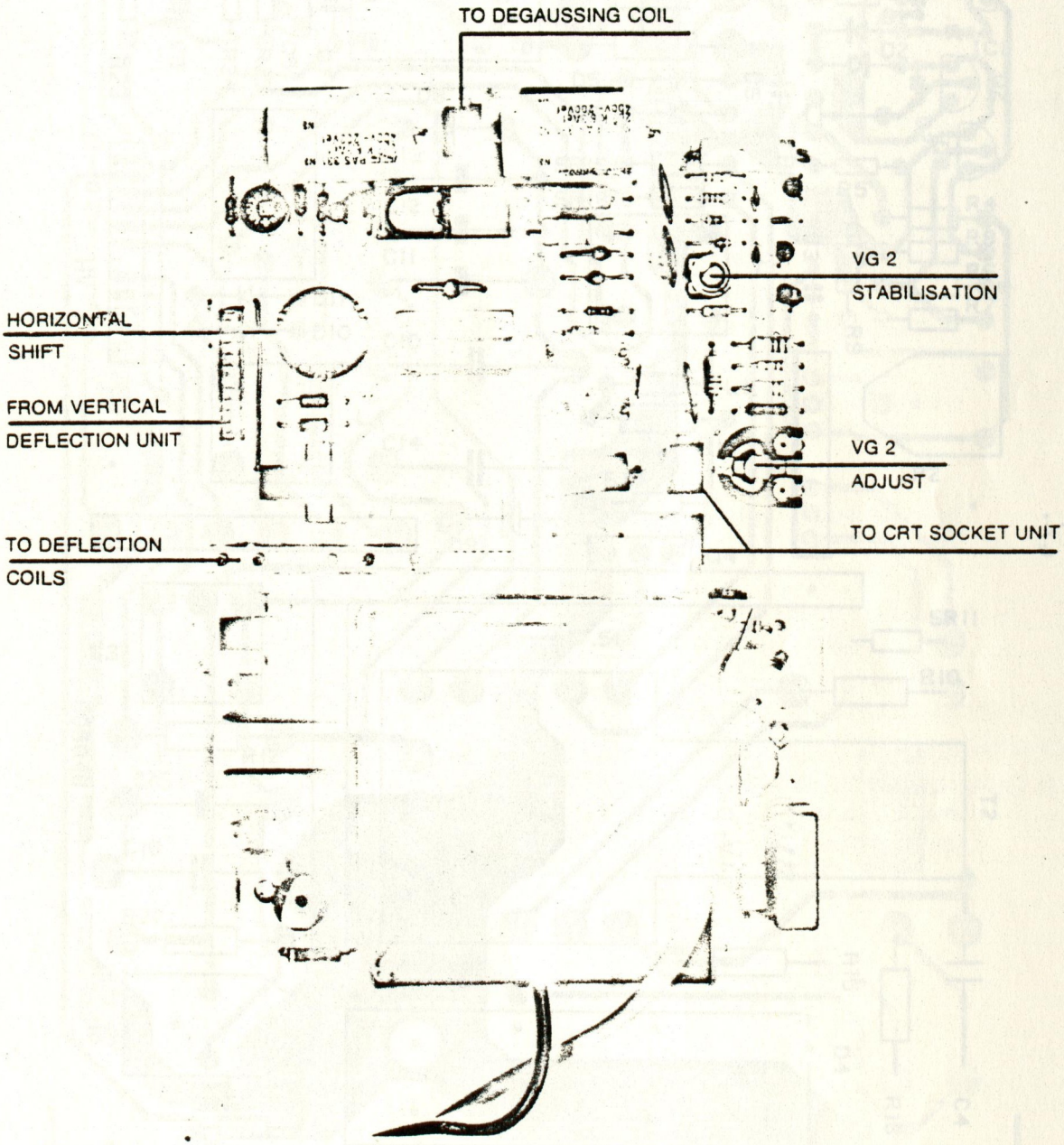

CRT DATABASE

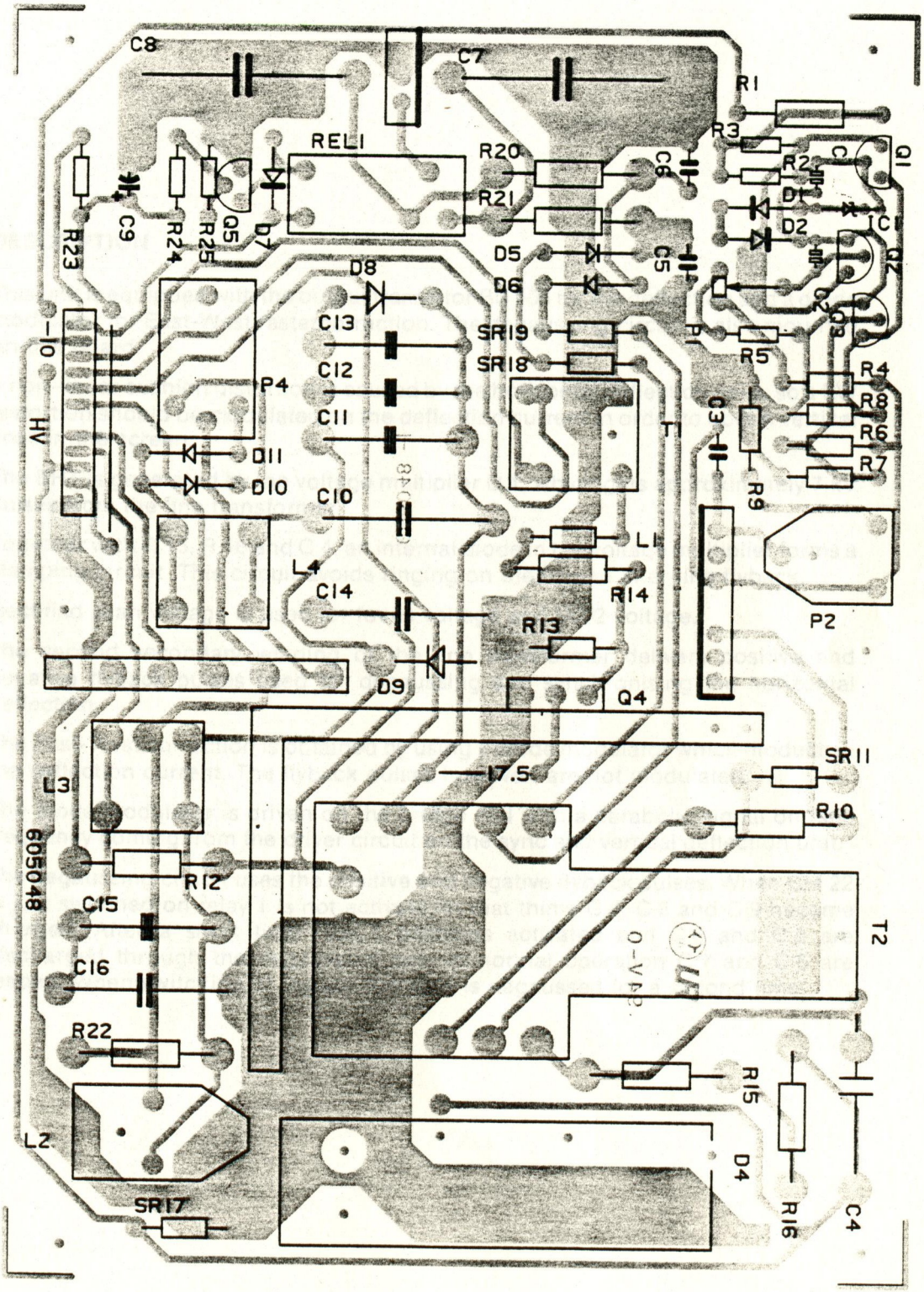

CRT DATABASE

DESCRIPTION

This unit is equipped with the output transistor BU 508 for the deflection and a diode modulator for East-West rastercorrection. The degaussing circuit is also mounted on this board.

A non-linear cushion distortion is caused by the horizontal deflection coils, so a EW distortion should be modulated on the deflection current in order to obtain vertical lines in the screen.

The EHT is generated by the voltage multiplier D 1, which gets approximately 7 kV pulses from the line transformer.

Together with R 15, R 16 and C 4, an internal diode in the voltage multiplier forms a clamping circuit. This circuit avoids ringing on the screen after line flyback.

Rectified scan voltage is used for focus voltage and VG 2 voltage.

The second secondary winding of the line transformer delivers positive and negative flyback pulses used for degaussing and synchronising the horizontal deflection.

The East-West correction is obtained by using a diode modulator which modulates the deflection current. The flyback pulses however, are not modulated.

The diode modulator is driven on the bridge coil with a parabolic signal on field frequency coming from the driver circuit on the sync and vertical deflection unit.

The degaussing circuit uses the positive and negative flyback pulses. When CM 22 is just switched on relay 1 is not activate, in that thime C 6, C 8 and C 9 become charged. After a short time relay 1 becomes activated and C 6 and C 8 are discharged through the degaussing coil. In normal operation C 7 and C 5 are loaded. When switching of the set, the tube is degaussed for a second time.

CRT DATABASE

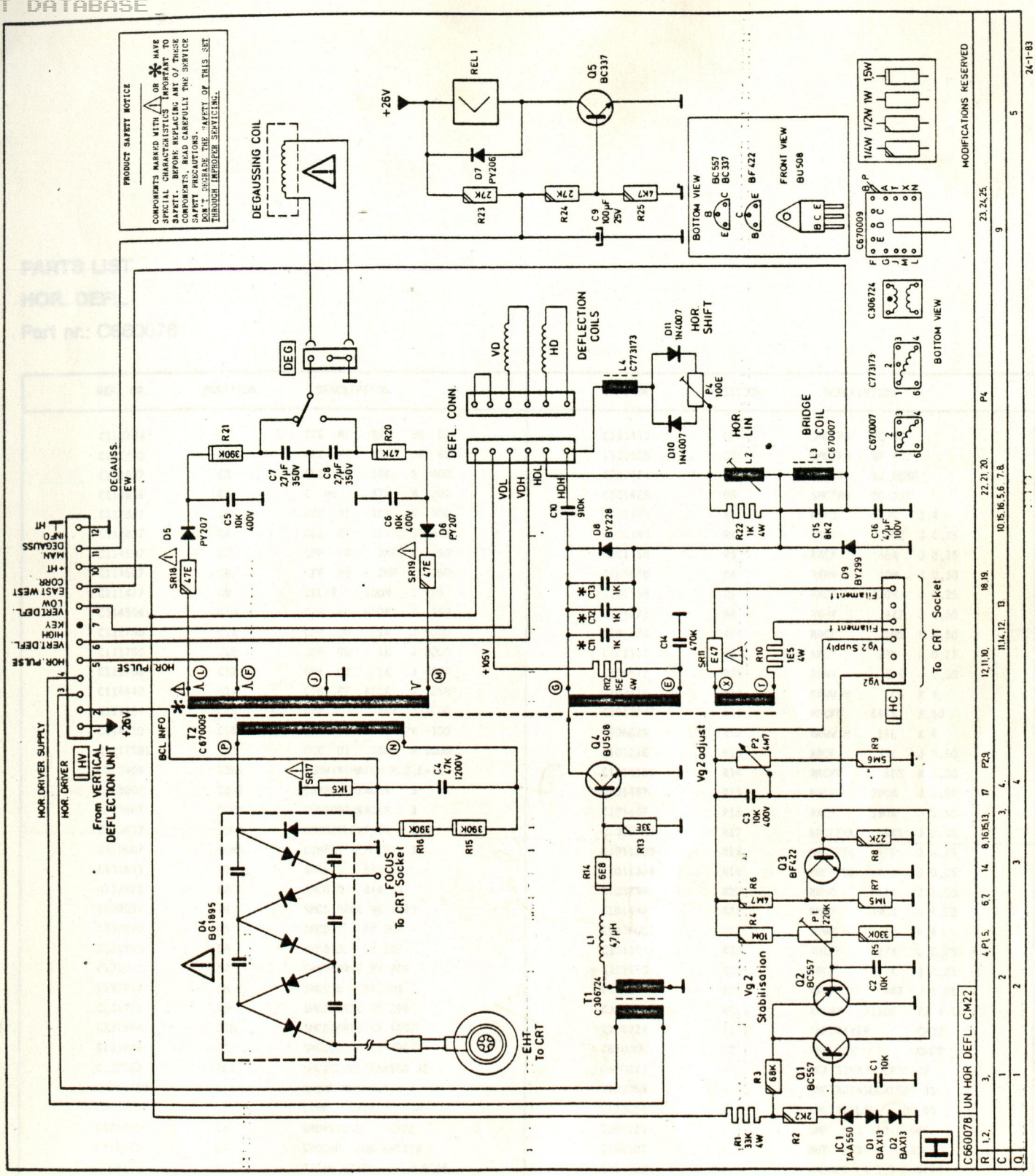

ADJUSTMENT PROCEDURE

— Put a test pattern on the screen.
— Adjust the horizontal position of the picture with P 4.
— Adjust P 1 for 50 V over resistor R 7 with beam current = 0.
— Horizontal linearity can be adjusted with L 2.
— See readjustment procedure concerning P 2.

CRT DATABASE

PARTS LIST

HOR. DEFL.

Part nr.: C660078

REF. NR.	POSITION	DESCRIPTION
C112763	C1	CCE MI 10K U5 63
C112763	C2	CCE MI 10K U5 63
C112837	C3	CCE DI 10K S 400
C114636	C4	C HV 47K M 1200
C112837	C5	CCE DI 10K S 400
C112837	C6	CCE DI 10K S 400
C114597	C7	CPP PO 2M7 K 350
C114597	C8	CPP PO 2M7 K 350
C111477	C9	CELPR 100M Z 25
C1145961	C10	CPP PO 910K K 250
C111760	C11	CPP DD 1K J 2000
C111760	C12	CPP DD 1K J 2000
C111760	C13	CPP DD 1K J 2000
C114442	C14	CPO FF 470K K 250
C111714	C15	CPP 8K2 J 1500
C114110	C16	CPOMEFF 4M7 K 100
C1117581	C17	CCE DI 10K M 1000
C313409	CON1	CONMINIMATCH M 2,5-12
C313607	CON2	CONPOSTHEADER 3
C313607	CON3	CONPOSTHEADER 3
C313613	CON4	CONDEFLEKTION OEM
C313607	CON5	CONPOSTHEADER 3
C131621	D1	SMCDIO BAX 13
C131621	D2	SMCDIO BAX 13
C132057	D4	SMCDIOREC BG 1895
C131910	D5	SMCDIO PY 207
C131910	D6	SMCDIO PY 207
C131911	D7	SMCDIOREC PY 206
C131917	D8	SMCDIO BY 228
C131921	D9	SMCDIOREC BY 299
C131646	D10	SMCDIOREC 1N 4007
C131646	D11	SMCDIOREC 1N 4007
C132102	IC1	SMCICLVOL TAA550 32
C3061282	L1	CHOKE NMS 4U7 K
C306403	L2	LINE C 4042/02 34
C670007	L3	SPOBRIDGE CM22
C773173	L4	SPOCHO HOR+EHT31R
C106112	P1	RTCAM H220K M 0,05
C106316	P2	RTCAS H 4M7 M 0,15
C106511	P4	RTWW KH 100E K 2
C605048	PC	PC -C660078
C131413	Q1	SMCTRA BC 557
C131413	Q2	SMCTRA BC 557
C132516	Q3	SMCTRA BF 422
C132574	Q4	SMCTRA BU 508A
C131426	Q5	SMCTRA BC 337
C103354	R1	RRMO 33K J 4
C101140	R2	RRCF 2K2 J 0,25
C101158	R3	RRCF 68K J 0,25
C104678	R4	RRHV 10M J 0,50
C101166	R5	RRCF 330K J 0,25
C104671	R6	RRHV 4K7 J 0,50
C101274	R7	RRCF 1M5 K 0,50
C101152	R8	RRCF 22K J 0,25
C104672	R9	RRHV 5M6 J 0,50
C103614	R10	RRWW H 1E5 K 4
C1012947	R11	RRCFF E47K 0,50
C103626	R12	RRWW H 15E K 4
C101218	R13	RRCF 33E J 0,50
C1014108	R14	RRCFF 6E8 K 1,30
C101467	R15	RRCF 390K J 1,50
C101467	R16	RRCF 390K J 1,50
C1012389	R17	RRCFFUL 1K5 J 0,50
C1011209	R18	RRCFFUL 47E J 0,25
C1011209	R19	RRCFFUL 47E J 0,25
C103256	R20	RRMO 47K J 1,50
C101467	R21	RRCF 390K J 1,50
C103660	R22	RRWW H 1K K 4
C101153	R23	RRCF 27K J 0,25
C101153	R24	RRCF 27K J 0,25
C101144	R25	RRCF 4K7 J 0,25
C324338	REL1	RELAY 1150E 27 V 1U
C306724	T1	TRFDRIVER CM22
C670009	T2	TRFLINE CM22
C600017	-	HEATSINK - CF33 02
C133055	-	SMCTRAINSULATSOT-93
C133054	-	SMCTRACLIP SOT-93
C362123	-	SMP M 3 X10 D7985
C366102	-	NUT M 3 H D 934
C367502	-	WASHER LA 3,2 D 6798
C367455	-	RIV.P FE D3,2 L 4,8
C367503	-	WASHER LA 4,3 D 6798
C349015	-	WIRE TREE -C660026
C348041	-	GROMMET SPIRE 6

CRT DATABASE

Input Output Unit

C660085

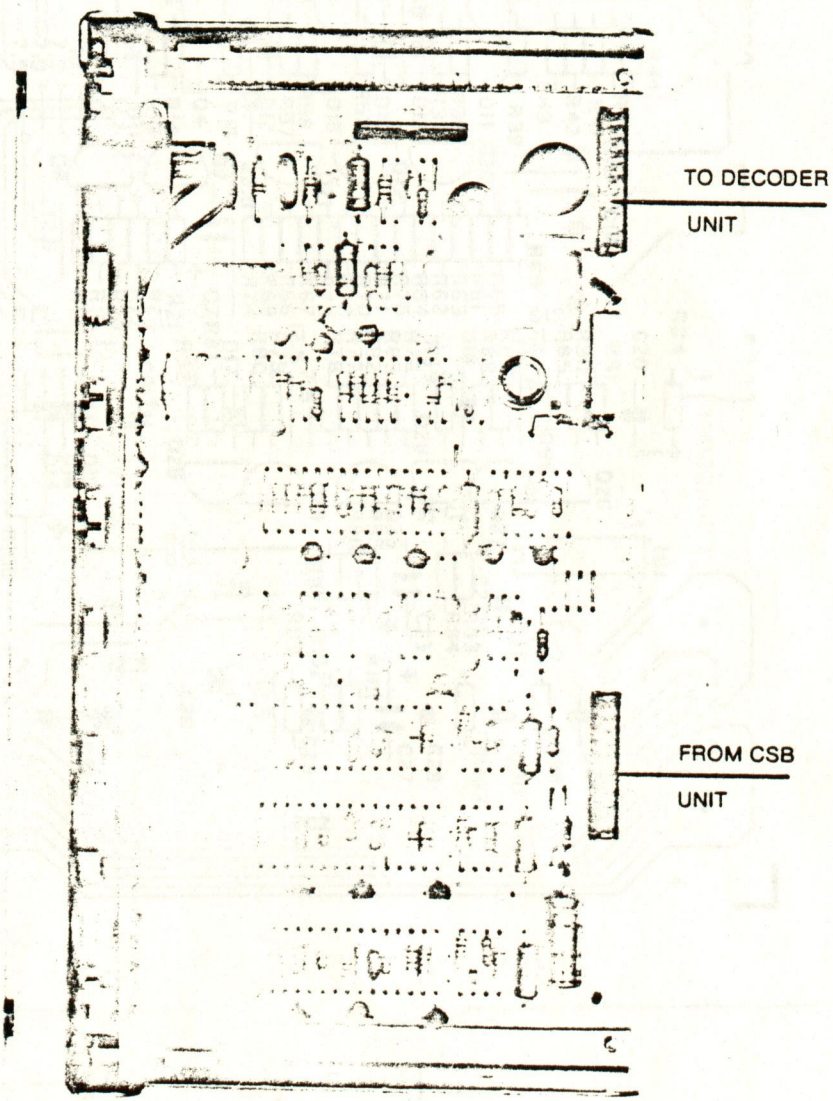

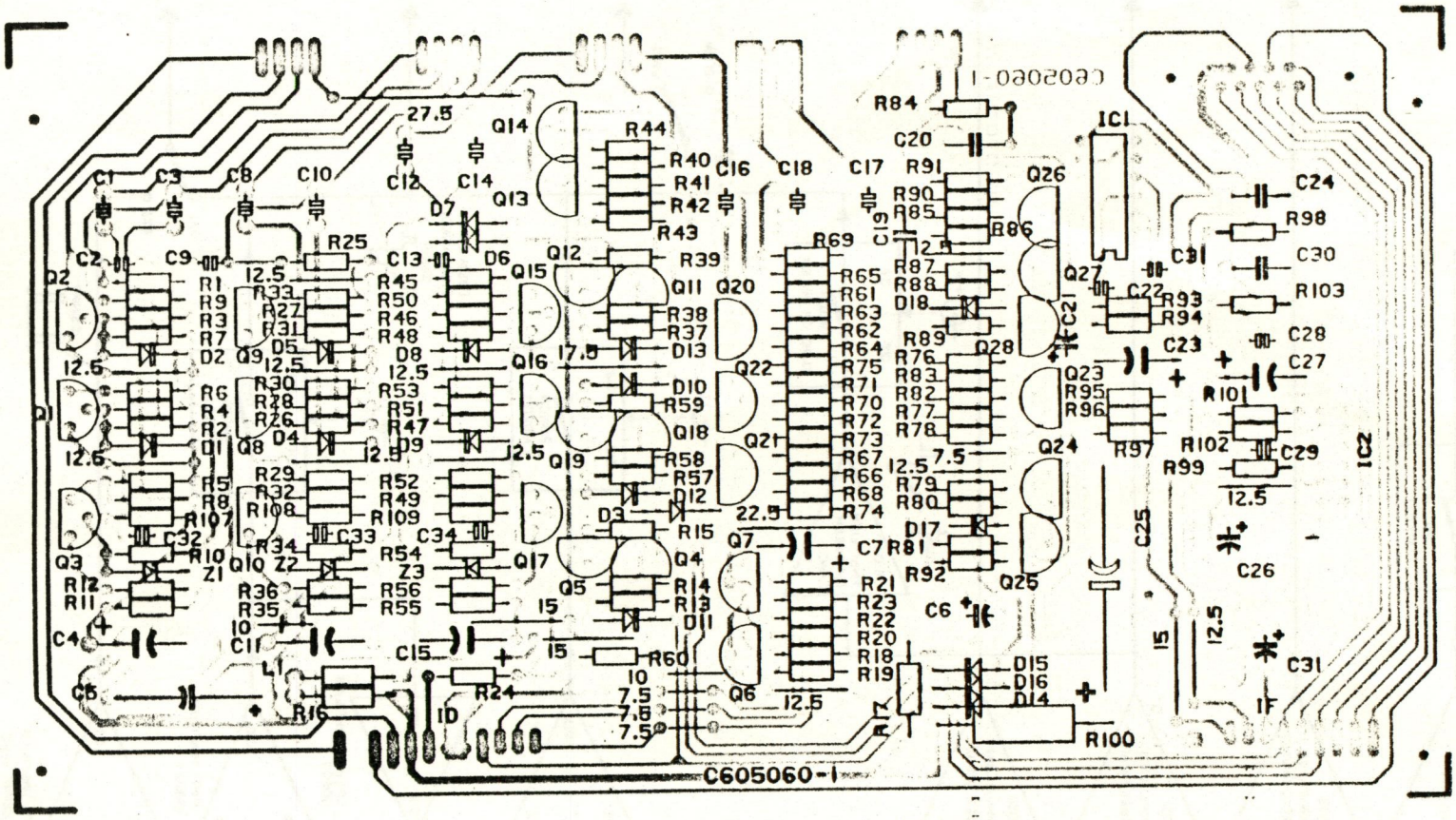

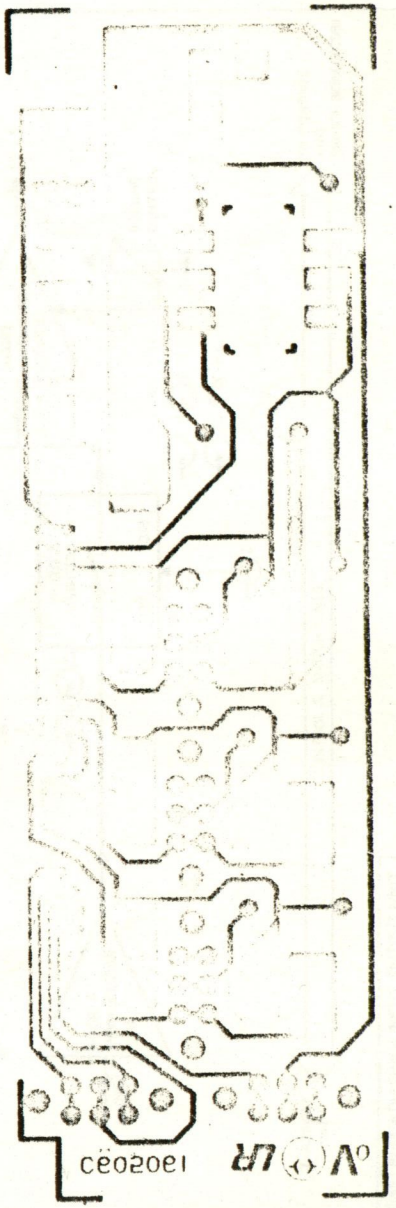

CRT DATABASE

CRT DATABASE

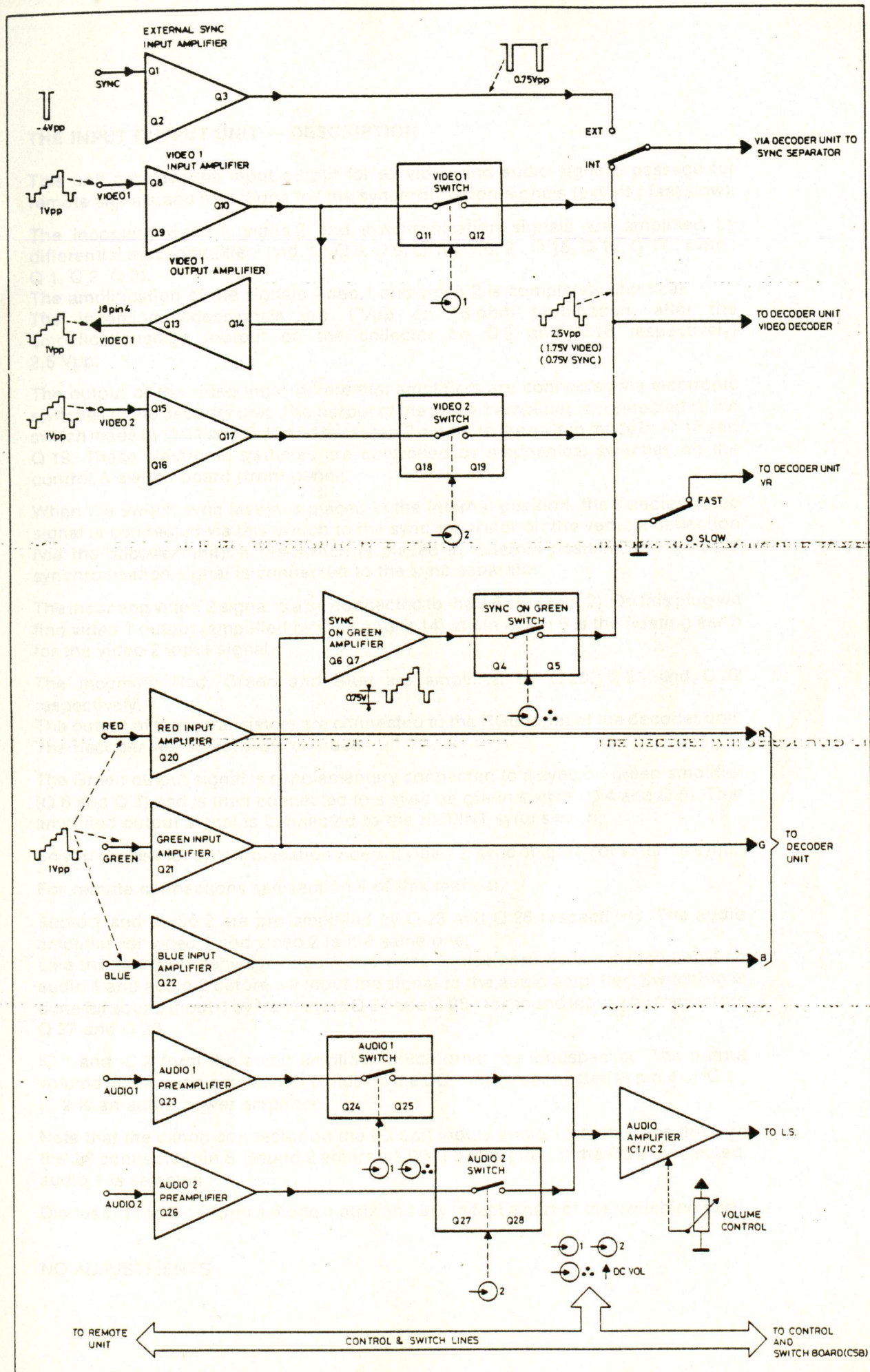

C660085 | BLOCKDIAGRAM INPUT OUTPUT UNIT

MODIFICATIONS RESERVED

CRT DATABASE

THE INPUT OUTPUT UNIT — DESCRIPTION

This unit provides the input output for all video and audio signals, passage for remote signals and selections for the synchronisation signals (ext/int ; fast/slow).

The incoming video 1, video 2 and synchronisation signals are amplified by differential input amplifiers (vid. 1 : Q 8, Q 9, Q 10 ; vid. 2 : Q 15, Q 16, Q 17 ; sync : Q 1, Q 2, Q 3).
The amplification of the signals video 1 and video 2 is completely identical.
The incoming videosignals are 1 Vpp on 75 ohm termination, after the amplificationstage (output on the collector on Q 9 and Q 16 respectively) 2.5 Vpp.

The output of the video input differential amplifiers are connected via electronic switches to the decoder unit. The output of the video 1 amplifier is connected to the switch made by Q 11 and Q 12 and the video 2 output to the switch made by Q 18 and Q 19. These electronic switches are controlled by mechanical switches on the control & switch board (front panel).

When the switch sync int/ext is placed in the internal position, the selected video signal is connected via this switch to the sync separator on the vertical deflection (via the decoder unit). If the switch is placed in external position, the external synchronisation signal is connected to the sync separator.

The incoming video 2 signal is also connected to the J 8 plug (pin 2). On this plug we find video 1 output (amplified by Q 13 and Q 14) at pin 4. Pin 6 is the floating earth for the video 2 input signal.

The incoming Red, Green and Blue are amplified by Q 20, Q 21 and Q 22 respectively.
The output of these transistors are connected to the RGB input of the decoder unit. The decoder will select RGB or video.

The Green output signal is supplementary connected to a sync on green amplifier (Q 6 and Q 7) and is then connected to a sync on green switch (Q 4 and Q 5). That amplified output signal is connected to the EXT/INT sync switch.

So you can use for synchronisation video 1, video 2, sync on green or external sync.

For remote connections see section II of this manual.

Audio 1 and audio 2 are pre amplified by Q 23 and Q 26 respectively. The audio amplifier for video 1 and video 2 is the same one.
Like the selection between video 1 and video 2, also here we will switch between audio 1 and audio 2 before we input the signal to the audio amplifier. Switching is done for sound input 1 by transistors Q 24 and Q 25 ; for sound input 2 by transistors Q 27 and Q 28.

IC 1 and IC 2 form the audio amplifier which drive the loudspeaker. The output volume of the audio amplifier depends on the DC voltage connected at pin 4 of IC 1 ; IC 2 is an audio power amplifier.

Note that the canon connector on the I/O unit inputs audio 1 which loops through the J 8 connector pin 8. Sound 2 enters via the J 8 plus pin 1. If the RGB is selected, audio 1 is selected.

Diodes D 11 to D 16 form a diode matrix and are in fact a part of the switching part.

NO ADJUSTMENTS

CRT DATABASE

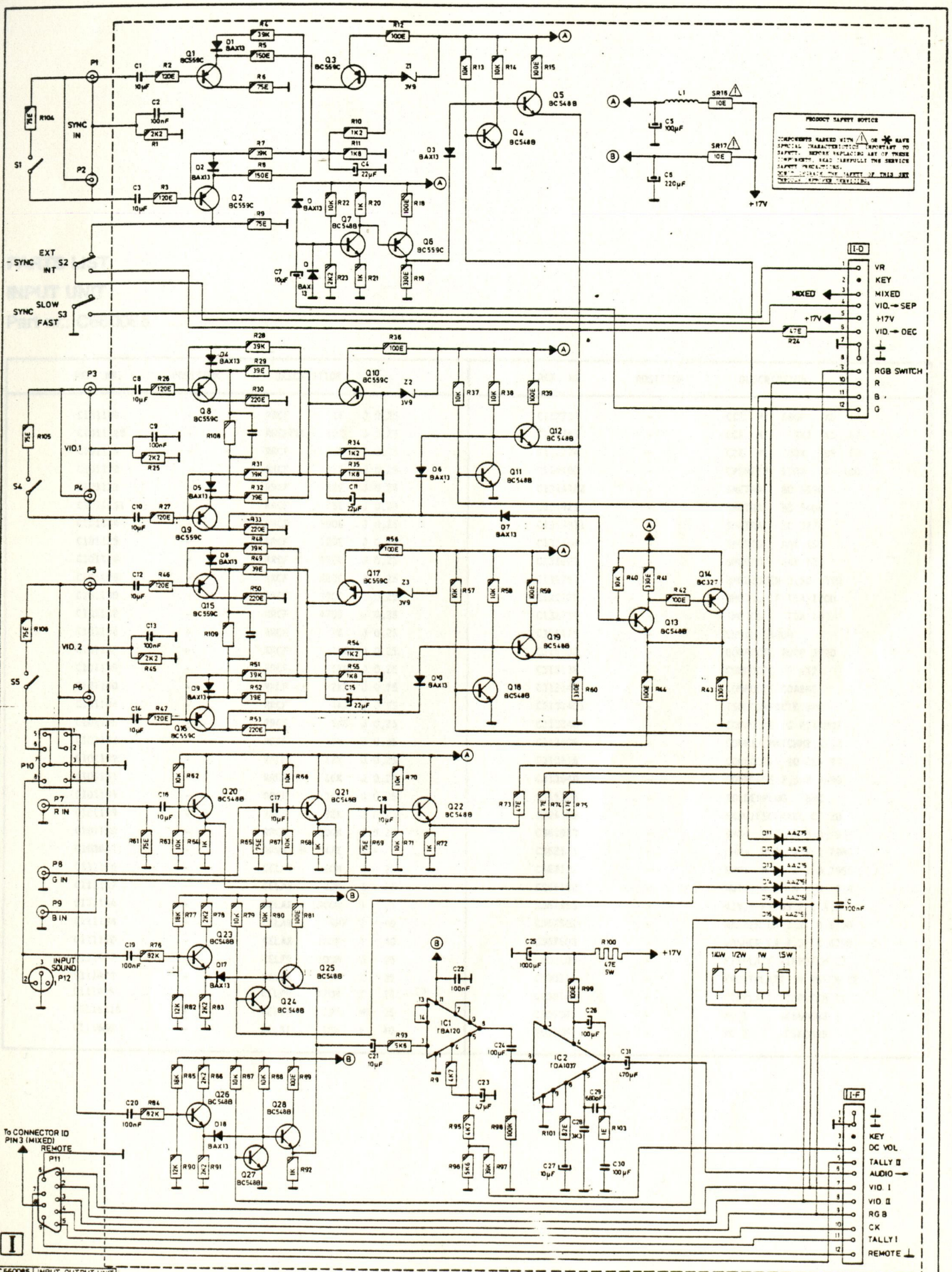

C660085 | INPUT OUTPUT UNIT

MODIFICATIONS RESERVED

4-2-83

CRT DATABASE

PARTS LIST

INPUT UNIT

Part nr.: C660085

REF. NR.	POSITION	DESCRIPTION
C101100	-	RRCF 1E J 0,25
C1011129	-	RRCFFUL 10E J 0,25
C101119	-	RRCF 39E J 0,25
C101120	-	RRCF 47E J 0,25
C101123	-	RRCF 82E J 0,25
C1011231	-	RRCF 75E J 0,25
C101124	-	RRCF 100E J 0,25
C101125	-	RRCF 120E J 0,25
C101126	-	RRCF 150E J 0,25
C101128	-	RRCF 220E J 0,25
C101130	-	RRCF 330E J 0,25
C101132	-	RRCF 470E J 0,25
C101136	-	RRCF 1K J 0,25
C101137	-	RRCF 1K2 J 0,25
C101139	-	RRCF 1K8 J 0,25
C101140	-	RRCF 2K2 J 0,25
C101144	-	RRCF 4K7 J 0,25
C101145	-	RRCF 5K6 J 0,25
C101148	-	RRCF 10K J 0,25
C101149	-	RRCF 12K J 0,25
C101151	-	RRCF 16K J 0,25
C101155	-	RRCF 39K J 0,25
C101159	-	RRCF 82K J 0,25
C101160	-	RRCF 100K J 0,25
C103632	-	RRWW H 47E K 4
C111156	-	CELAX 10M Z 25
C111157	-	CELAX 22M Z 25
C111164	-	CELAX 1000M T 25
C111184	-	CELAX 4M7 Z 40
C111190	-	CELAX 100M T 40
C111477	-	CELPR 100M Z 25
C111478	-	CELPR 220M Z 25
C111479	-	CELPR 470M Z 25
C1115315	-	CELSNMI 10M M5 35
C111680	-	CELBI 10M Y 40

REF. NR.	POSITION	DESCRIPTION
C112737	-	CCE MI 680P K5 63
C112745	-	CCE MI 3K3 K5 63
C112774	-	CCE MI 100K U5 63
C114100	-	CPOMEFF 100K K 100
C1314182	-	SMCTRA BC 559C
C131429	-	SMCTRA BC 548B
C1314311	-	SMCTRA BC 327
C131504	-	SMCDIO AAZ 15
C131621	-	SMCDIO BAX 13
C131757	-	SMCDIOZEN 0,50 3V9
C132190	-	SMCICL IF TBA 120U
C132739	-	SMCICL TDA 1037
C306170	-	CHOKE 680UH
C313132	-	CONFOCTE AUDP 3#90
C313138	-	CONFOCTE P 4X2
C313140	-	CONFOCTE COABNC
C3131401	-	ISOLCONFOCTE BNC
C313248	-	CONFOBTE IC P14RM07
C313409	-	CONMINIMATCHM2,5-12
C313516	-	CONFOBSE 90 DE- 9S
C313640	-	CONMOBSE 2,54P 4-90
C315326	-	SOLDERPLUG BNC
C324159	-	SCHUIFSCHAKEL CI 2U
C361913	-	SMC+ M 3 X 8 D 965
C362121	-	SMP+ M 3 X 6 D 7985
C362122	-	SMP+ M 3 X 8 D 7985
C366102	-	NUT M 3 H D 934
C367455	-	RIV.P FE 03,2 L 4,6
C367502	-	WASHER LA 3,2 D 6798
C367503	-	WASHER LA 4,3 D 6798
C600109	-	FIXPLATE RINPUTCM 22
C600116	-	FRONTPLATE IN PUTCM 22
C600143	-	FIXPLATE LINPUTCM 22
C605060	-	PC 1 -C660085
C605061	-	PC 2 -C660085

CRT DATABASE

Control Unit

C660083

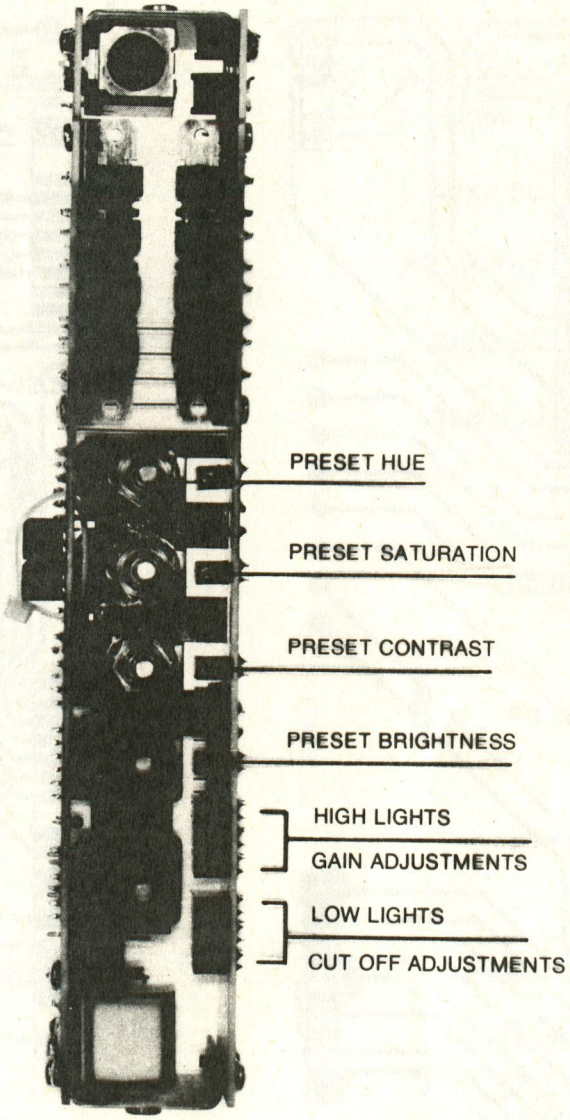

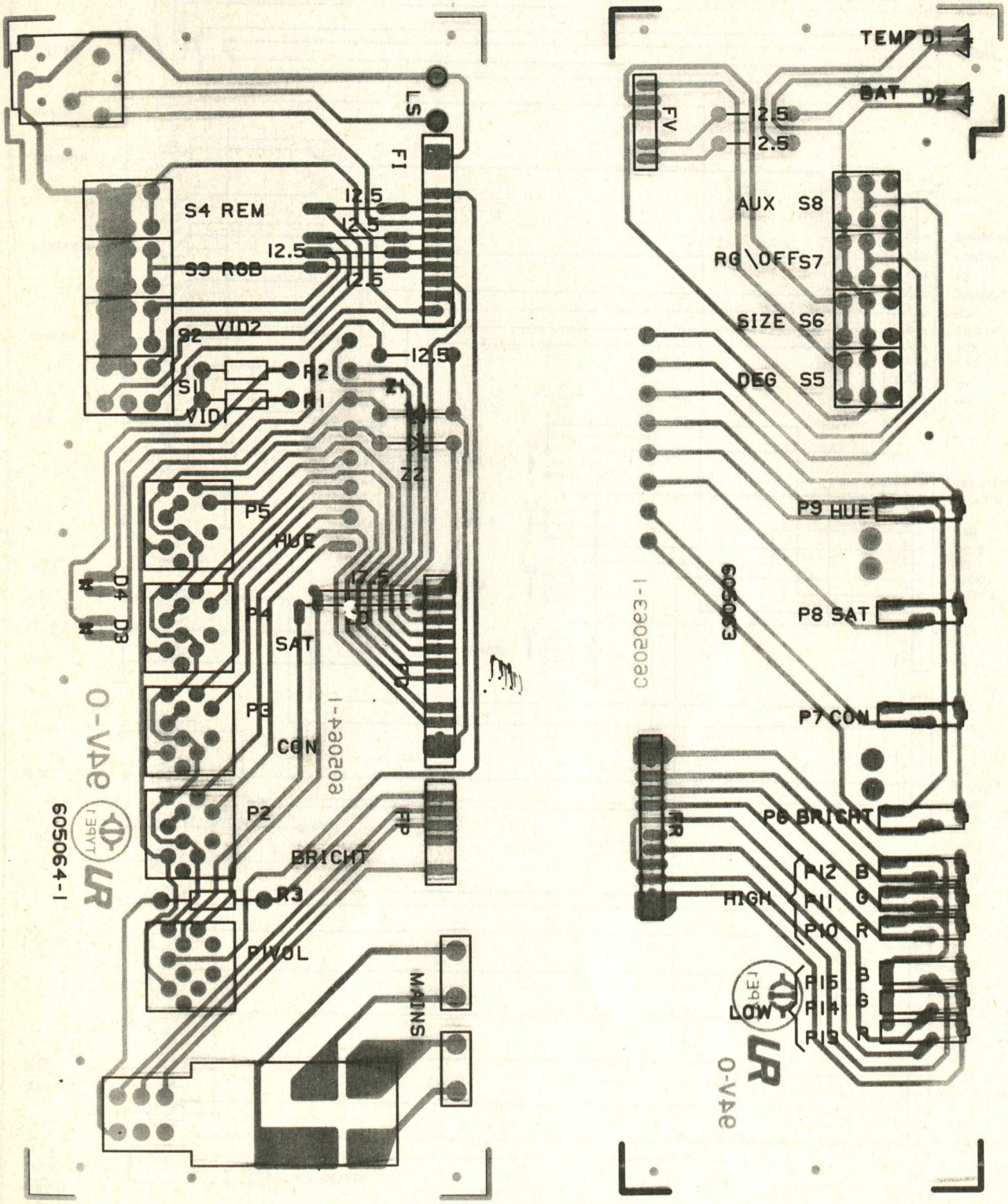
LS
F1
S4 REM
12.5
12.5
12.5
S3 RGB
12.5
S2
VID2
12.5
S1
R2
R1
VID1
Z1
Z2
P5
HUE
D4
D3
P4
SAT
P3
CON
P2
BRICHT
R3
PIVOL
FP
MAINS
605064-1
TEMP D1
BAT D2
FV
12.5
12.5
AUX S8
RG\OFF S7
SIZE S6
DEG S5
P9 HUE
P8 SAT
P7 CON
P6 BRICHT
FR
HIGH
P12 B
P11 G
P10 R
LOW
P15 B
P14 G
P13 R

CRT DATABASE

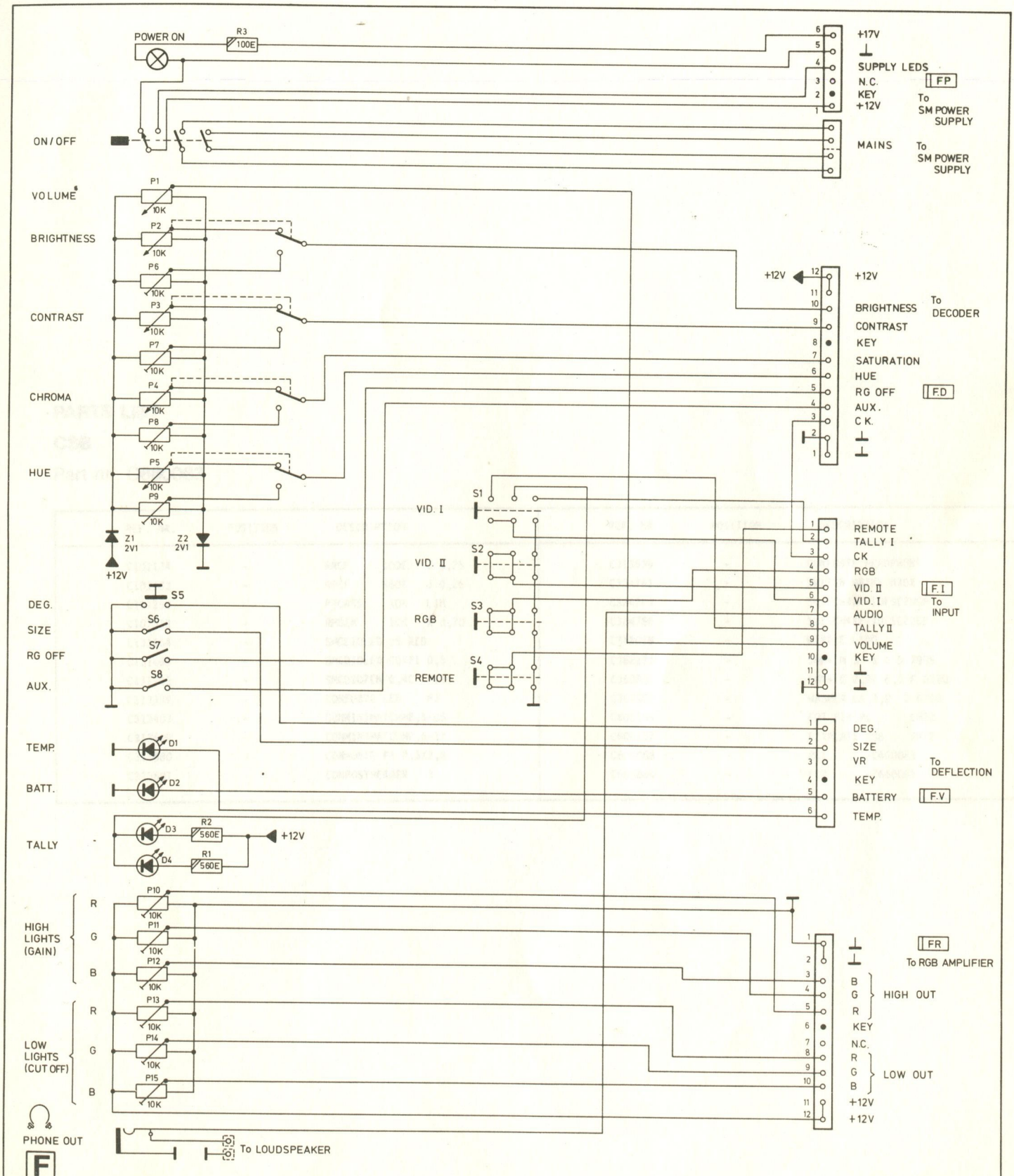

C660083 | CONTROL PANEL CM22

MODIFICATIONS RESERVED

27-1-83

CRT DATABASE

PARTS LIST

CSB

Part nr.: C660083

REF. NR.	POSITION	DESCRIPTION
C101124	-	RRCF 100E J 0,25
C101133	-	RRCF 560E J 0,25
C107250	-	RPCASS 10K LIN
C107513	-	RMCEM 10K K 0,70
C131664	-	SMCDIOLED D5 RED
C131669	-	SMCDIOLED CQX21 D,5
C131733	-	SMCDIOZEN 0,4C 2V1
C313389	-	CONFOBTE LED P2
C313403	-	CONMINIMATCHM2,5-06
C313409	-	CONMINIMATCHM2,5-12
C313580	-	CONMOBTE P1 0,5X2,8
C313607	-	CONPOSTHEADER 3

REF. NR.	POSITION	DESCRIPTION
C313639	-	CONFOBTE HEADPHONE
C324781	-	SWITCH MAINS N30X
C324785	-	SWITCH4XF-10FSC2UGR
C324786	-	SWITCH4XF-10FSC2UEE
C348019	-	WIRTIE L100
C362121	-	SMP+ M 3 X 6 D 7985
C363601	-	SMP+ C 2,9X 6,5 F OZID
C367502	-	WASHER LA 3,2 D 6798
C600106	-	FOT FIX.PL CM22
C600107	-	FIXPLATE CSB CM22
C605063	-	PC1 -C660083
C605064	-	PC2 -C660083

CRT DATABASE

Pal decoder unit

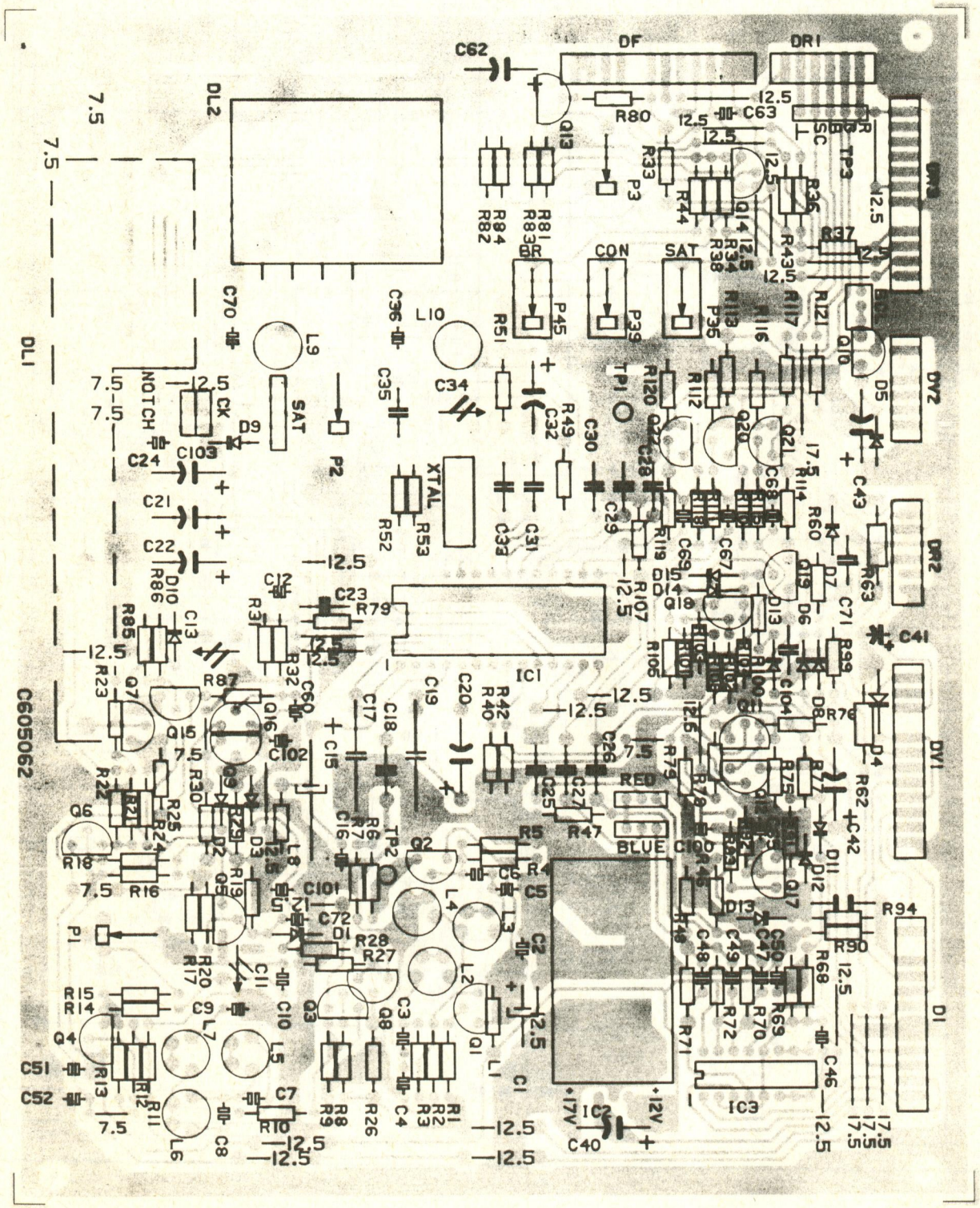

CRT DATABASE

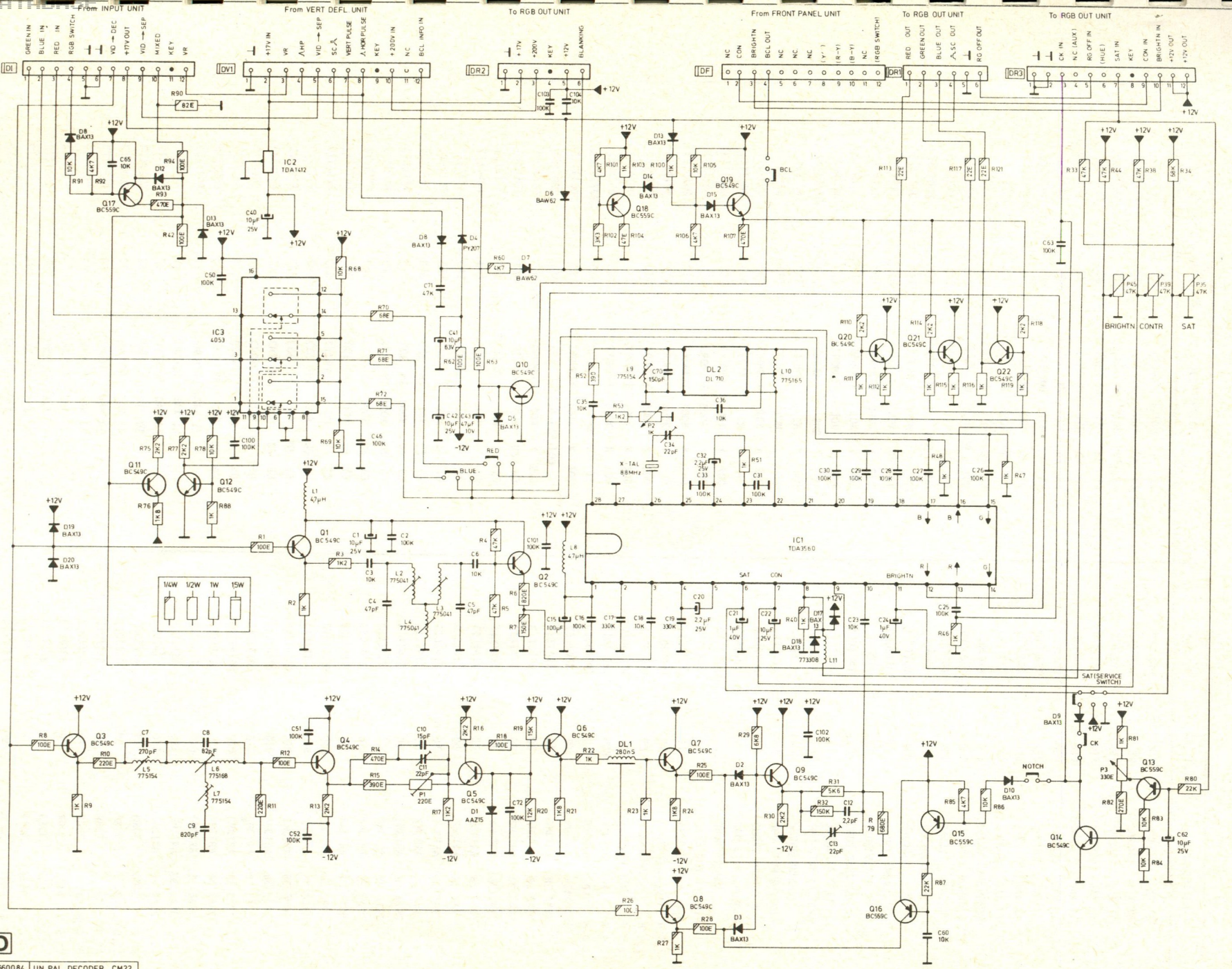

D

C660084	UN. PAL. DECODER CM22

MODIFICATIONS RESERVED

R	8, 91,92, 9, 10, 93,94,75,76,42, 90,77, 78,88, 1, 11, 12, 2, 13, 68,69,3, 70,71,72,14,15, P1, 62,17, 63,16, 60,4,5, 18,6,7, 19,20, 21,52,22, 101,102,53,103,104,P2,26,23,100,105,106,24,27,25,28, 107, 52,29, 30, 40, 32, 31, 110,111, 112,79,113, 114,115, 117,116,48,46,87,121, 85, 86, 118,119,47, 33, 44, P45, 38,81,P3,82,39,83,84, 34, P35, 80,
C	65, 7, 9, 8, 100, 40, 51,52, 45, 1, 2,4, 71,41,42,10,11, 43, 5, 6, 72, 101,103,104, 15, 35,16, 17, 18, 70, 34, 19, 20, 33, 32, 36, 21, 31, 22, 102,30, 13, 12,29,23, 28, 24, 27, 60, 25, 26, 63, 62
Q	3, 17, 11, 12, 1, 4, 5, 10, 2, 6, 18, 7, 8, 19, 9, 20, 16, 21, 15, 22, 14, 13

1-2-83

CRT DATABASE

PAL DECODER

Part nr.: C660084

REF. NR.	POSITION	DESCRIPTION
C111156	C1	CELAX 10M Z 25
C112774	C2	CCE MI 100K U5 63
C112763	C3	CCE MI 10K U5 63
C112238	C4	CNPO MI 47P G5 63
C112238	C5	CNPO MI 47P G5 63
C112763	C6	CCE MI 10K U5 63
C112367	C7	CN750MI 270P G5 63
C1122415	C8	CNPO MI 82P G5 63
C112738	C9	CCE MI 820P K5 63
C112232	C10	CNPO MI 15P G5 63
C117009	C11	CST TR 1,S-22P 100
C112222	C12	CNPO MI 2P2 C5 63
C117009	C13	CST TR 1,8-22P 100
C111190	C15	CELAX 100M T 40
C112774	C16	CCE MI 100K U5 63
C114138	C17	CPOMEFF 330K K 250
C114120	C18	CPOMEFF 10K K 250
C114138	C19	CPOMEFF 330K K 250
C1111555	C20	CELAX 2M2 T 25
C1111841	C21	CELAX 1M T 40
C111156	C22	CELAX 10M Z 25
C114120	C23	CPOMEFF 10K K 250
C1111841	C24	CELAX 1M T 40
C114100	C25	CPOMEFF 100K K 100
C114100	C26	CPOMEFF 100K K 100
C114100	C27	CPOMEFF 100K K 100
C114100	C28	CPOMEFF 100K K 100
C114100	C29	CPOMEFF 100K K 100
C114100	C30	CPOMEFF 100K K 100
C114100	C31	CPOMEFF 100K K 100
C1111555	C32	CELAX 2M2 T 25
C114100	C33	CPOMEFF 100K K 100
C117009	C34	CST TR 1,8-22P 100
C114120	C35	CPOMEFF 10K K 250
C112763	C36	CCE MI 10K U5 63
C111156	C40	CELAX 10M Z 25
C111494	C41	CELPR 10M Z 63
C111156	C42	CELAX 10M Z 25
C111130	C43	CELAX 47M Z 10
C112763	C46	CCE MI 10K U5 63
C112774	C50	CCE MI 100K U5 63
C112774	C51	CCE MI 100K U5 63
C112774	C52	CCE MI 100K U5 63
C112763	C60	CCE MI 10K U5 63
C111156	C62	CELAX 10M Z 25
C112774	C63	CCE MI 100K U5 63
C112763	C65	CCE MI 10K U5 63
C112364	C70	CN750MI 150P G5 63
C114120	C104	CPOMEFF 10K K 250
C111184	C105	CELAX 4M7 Z 40
C112763	C106	CCE MI 10K U5 63
C131504	D1	SMCDIO AAZ 15
C131621	D2	SMCDIO BAX 13
C131621	D3	SMCDIO BAX 13
C131910	D4	SMCDIO PY 207
C131621	D5	SMCDIO BAX 13
C131628	D6	SMCDIO BAW 62
C131628	D7	SMCDIO BAW 62
C131621	D8	SMCDIO BAX 13
C131621	D9	SMCDIO BAX 13
C131621	D10	SMCDIO BAX 13
C131621	D11	SMCDIO BAX 13
C131621	D12	SMCDIO BAX 13
C131621	D13	SMCDIO BAX 13
C131621	D14	SMCDIO BAX 13
C131621	D15	SMCDIO BAX 13
C131621	D16	SMCDIO BAX 13
C131621	D17	SMCDIO BAX 13
C131621	D18	SMCDIO BAX 13

REF. NR.	POSITION	DESCRIPTION
C131621	D19	SMCDIO BAX 13
C131621	D20	SMCDIO BAX 13
C131621	D21	SMCDIO BAX 13
C131621	D22	SMCDIO BAX 13
C131621	D23	SMCDIO BAX 13
C131621	D24	SMCDIO BAX 13
C131621	D25	SMCDIO BAX 13
C131621	D26	SMCDIO BAX 13
C131621	D27	SMCDIO BAX 13
C306514	DL1	DELAY LINE 280NS
C306511	DL2	DELAY L M P/S,DL710
C137701	IC1	SMCIC TDA3560
C134006	IC2	SMCICLVOL TDA 14 12
C137700	IC3	SMCICD 4053 B
C3061282	L1	CHOKE NMS4U7 K
C775041	L2	SPOSECDECODER
C775041	L3	SPOSECDECODER
C775041	L4	SPOSECDECODER
C775154	L5	SPO CTVM DECODEM
C775168	L6	SPOPALOUPUT
C775154	L7	SPO CTVM DECODEM
C3061282	L8	CHOKE NMS4U7 K
C775154	L9	SPO CTVM DECODEM
C775165	L10	SPOPALDEMOD
C773308	L11	CORE CHO 3/6 X18
C1061031	P1	RECP10H470E M 0,1
C1061041	P2	RECP10H 1K M 0,10
C1061031	P3	RECP10H470E M 0,1
C1061091	P35	RECP10H 47K M 0,1
C1061091	P39	RECP10H 47K M 0,1
C1061091	P45	RECP10H 47K M 0,1
C605062	01	PC -C660084
C131411	Q1	SMCTRA BC 549C
C131411	Q2	SMCTRA BC 549C
C131411	Q3	SMCTRA BC 549C
C131411	Q4	SMCTRA BC 549C
C131411	Q5	SMCTRA BC 549C
C131411	Q6	SMCTRA BC 549C
C131411	Q7	SMCTRA BC 549C
C131411	Q8	SMCTRA BC 549C
C131411	Q9	SMCTRA BC 549C
C131411	Q10	SMCTRA BC 549C
C131411	Q11	SMCTRA BC 549C
C131411	Q12	SMCTRA BC 549C
C1314182	Q13	SMCTRA BC 559C
C131411	Q14	SMCTRA BC 549C
C1314182	Q15	SMCTRA BC 559C
C1314182	Q16	SMCTRA BC 559C
C1314182	Q17	SMCTRA BC 559C
C1314182	Q18	SMCTRA BC 559C
C131411	Q19	SMCTRA BC 549C
C131411	Q20	SMCTRA BC 549C
C131411	Q21	SMCTRA BC 549C
C131411	Q22	SMCTRA BC 549C
C101124	R1	RRCF 100E J 0,25
C101136	R2	RRCF 1K J 0,25
C101137	R3	RRCF 1K2 J 0,25
C101156	R4	RRCF 47K J 0,25
C101156	R5	RRCF 47K J 0,25
C101135	R6	RRCF 820E J 0,25
C101126	R7	RRCF 150E J 0,25
C101124	R8	RRCF 100E J 0,25
C101136	R9	RRCF 1K J 0,25
C101128	R10	RRCF 220E J 0,25
C101128	R11	RRCF 220E J 0,25
C101124	R12	RRCF 100E J 0,25
C101140	R13	RRCF 2K2 J 0,25
C101132	R14	RRCF 470E J 0,25
C101131	R15	RRCF 390E J 0,25

CRT DATABASE

REF. NR.	POSITION	DESCRIPTION
C101140	R16	RRCF 2K2 J 0,25
C101137	R17	RRCF 1K2 J 0,25
C101124	R18	RRCF 100E J 0,25
C101150	R19	RRCF 15K J 0,25
C101149	R20	RRCF 12K J 0,25
C101139	R21	RRCF 1K8 J 0,25
C101136	R22	RRCF 1K J 0,25
C101136	R23	RRCF 1K J 0,25
C101139	R24	RRCF 1K8 J 0,25
C101124	R25	RRCF 100E J 0,25
C101124	R26	RRCF 100E J 0,25
C101136	R27	RRCF 1K J 0,25
C101124	R28	RRCF 100E J 0,25
C101146	R29	RRCF 6K8 J 0,25
C101140	R30	RRCF 2K2 J 0,25
C101145	R31	RRCF 5K6 J 0,25
C101162	R32	RRCF 150K J 0,25
C101156	R33	RRCF 47K J 0,25
C101158	R34	RRCF 68K J 0,25
C101156	R38	RRCF 47K J 0,25
C101136	R40	RRCF 1K J 0,25
C101124	R42	RRCF 100E J 0,25
C101156	R44	RRCF 47K J 0,25
C101131	R49	RRCF 390E J 0,25
C101136	R51	RRCF 1K J 0,25
C101131	R52	RRCF 390E J 0,25
C101137	R53	RRCF 1K2 J 0,25
C101144	R60	RRCF 4K7 J 0,25
C101224	R62	RRCF 100E J 0,50
C101224	R63	RRCF 100E J 0,50
C101122	R70	RRCF 68E J 0,25
C101122	R71	RRCF 68E J 0,25
C101122	R72	RRCF 68E J 0,25
C101140	R75	RRCF 2K2 J 0,25
C101140	R77	RRCF 2K2 J 0,25
C101148	R78	RRCF 10K J 0,25
C101136	R79	RRCF 1K J 0,25
C101152	R80	RRCF 22K J 0,25
C101136	R81	RRCF 1K J 0,25
C101129	R82	RRCF 270E J 0,25
C101148	R83	RRCF 10K J 0,25
C101148	R84	RRCF 10K J 0,25
C101144	R85	RRCF 4K7 J 0,25
C101148	R86	RRCF 10K J 0,25

REF. NR.	POSITION	DESCRIPTION
C101152	R87	RRCF 22K J 0,25
C101223	R90	RRCF 82E J 0,50
C101148	R91	RRCF 10K J 0,25
C101144	R92	RRCF 4K7 J 0,25
C101132	R93	RRCF 470E J 0,25
C101124	R94	RRCF 100E J 0,25
C101136	R100	RRCF 1K J 0,25
C101144	R101	RRCF 4K7 J 0,25
C101142	R102	RRCF 3K3 J 0,25
C101136	R103	RRCF 1K J 0,25
C101120	R104	RRCF 47E J 0,25
C101148	R105	RRCF 10K J 0,25
C101144	R106	RRCF 4K7 J 0,25
C101132	R107	RRCF 470E J 0,25
C101140	R110	RRCF 2K2 J 0,25
C101136	R111	RRCF 1K J 0,25
C101136	R112	RRCF 1K J 0,25
C101116	R113	RRCF 22E J 0,25
C101140	R114	RRCF 2K2 J 0,25
C101136	R115	RRCF 1K J 0,25
C101136	R116	RRCF 1K J 0,25
C101116	R117	RRCF 22E J 0,25
C101140	R118	RRCF 2K2 J 0,25
C101136	R119	RRCF 1K J 0,25
C101136	R120	RRCF 1K J 0,25
C101116	R121	RRCF 22E J 0,25
C101135	R122	RRCF 820E J 0,25
C101148	R123	RRCF 10K J 0,25
C101184	R124	RRCF 10M K 0,25
C306816	XTAL	X TAL 8.867 238MHZ
C313247	-	CONFOBTE IC P16RM07
C313253	-	CONFOBTE IC P28RM15
C313276	-	CONMOBTE 2,5 P10
C3133921	-	CONF2,54 JUMPER SN
C313628	-	CONMOBTEMOD52,54-15
C133047	-	SMCTRACOOLER IO-220
C362122	-	SMP+ M 3 X S D7985
C366102	-	NUT M 3 H D 934
C367502	-	WASHER LA 3,2 D 6798
C362124	-	SMP+ M 3 X12 D 7985
C313409	-	CONMINIMATCHM2,5-12
C313403	-	CONMINIMATCHM2,5-06
C313276	-	CONMOBTE 2,5 P1G
C7123024	-	D 7 XD 3,25 BAK1

CRT DATABASE

UN. DECODER NTSC COMB CM22 (C660132)

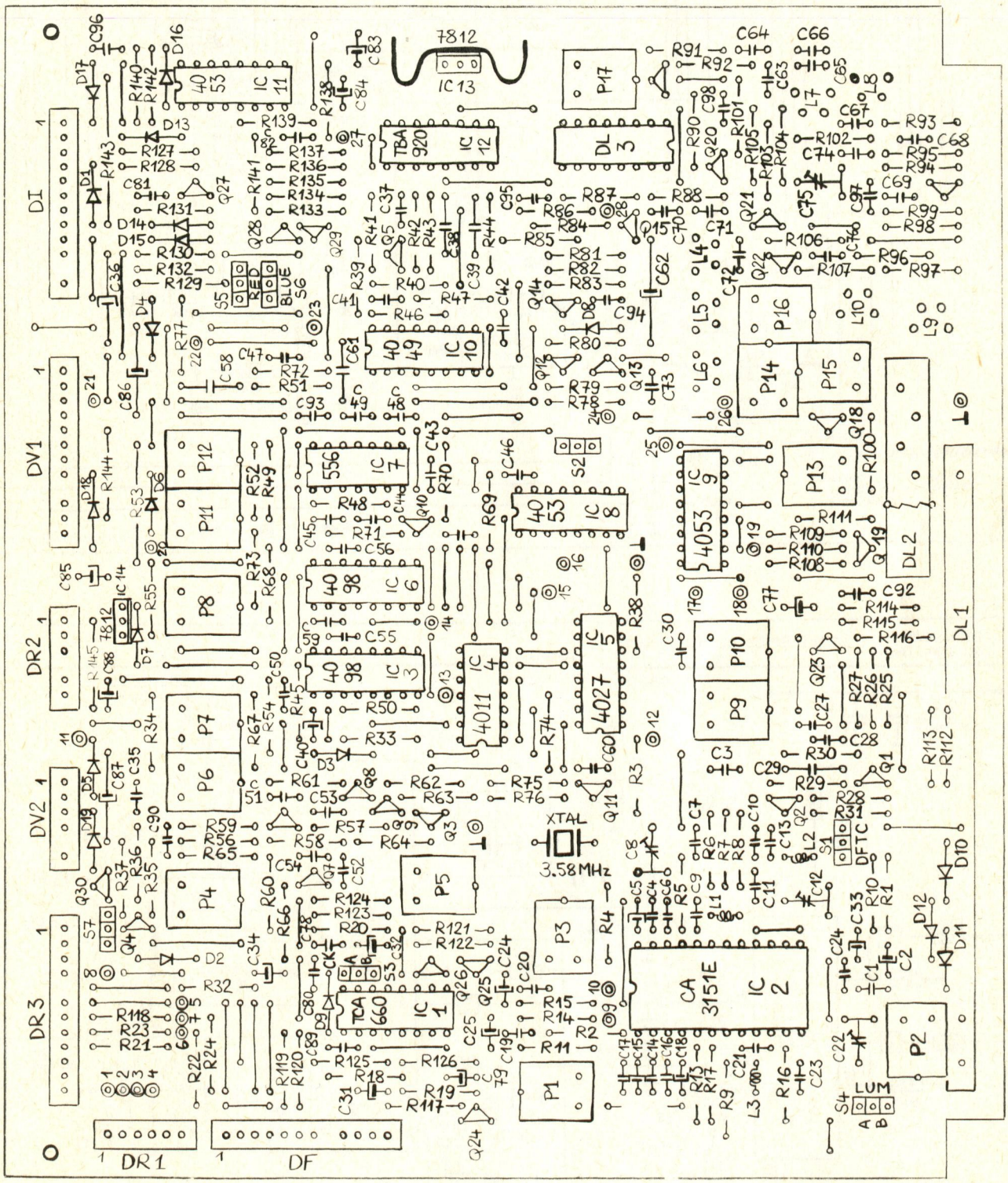

C605087

CRT DATABASE

UN. DEC. NTSC COMB CM 22 : CONNECTIONS SUPPLY RGB PROCESSING

C660132

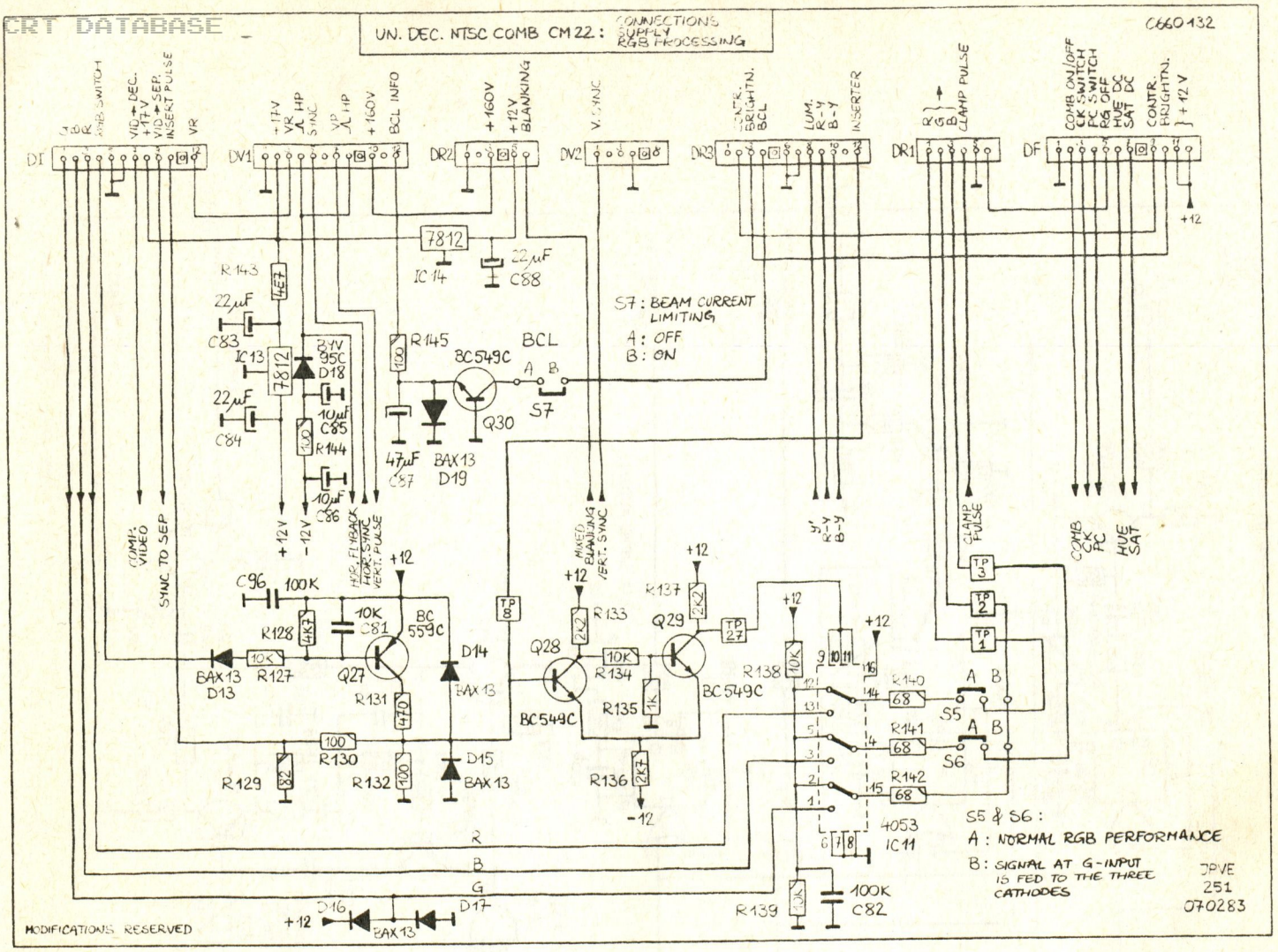

UN. DEC. NTSC COMB CM 22 : DEMODULATOR SAT. ADJUST

C 660 132

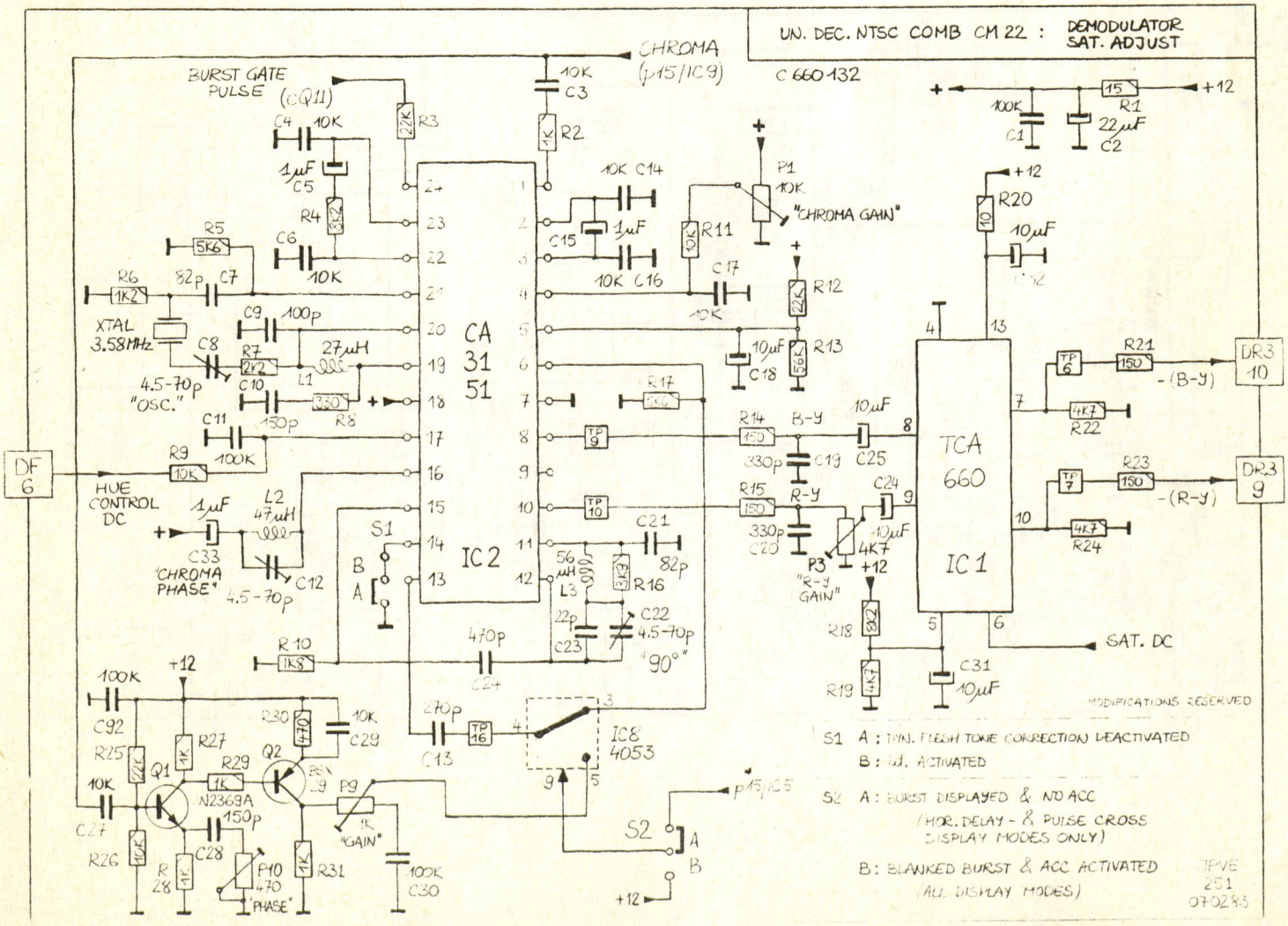

UN. DEC. NTSC COMB CM 22
PULSE CROSS PROCESSING

C660132

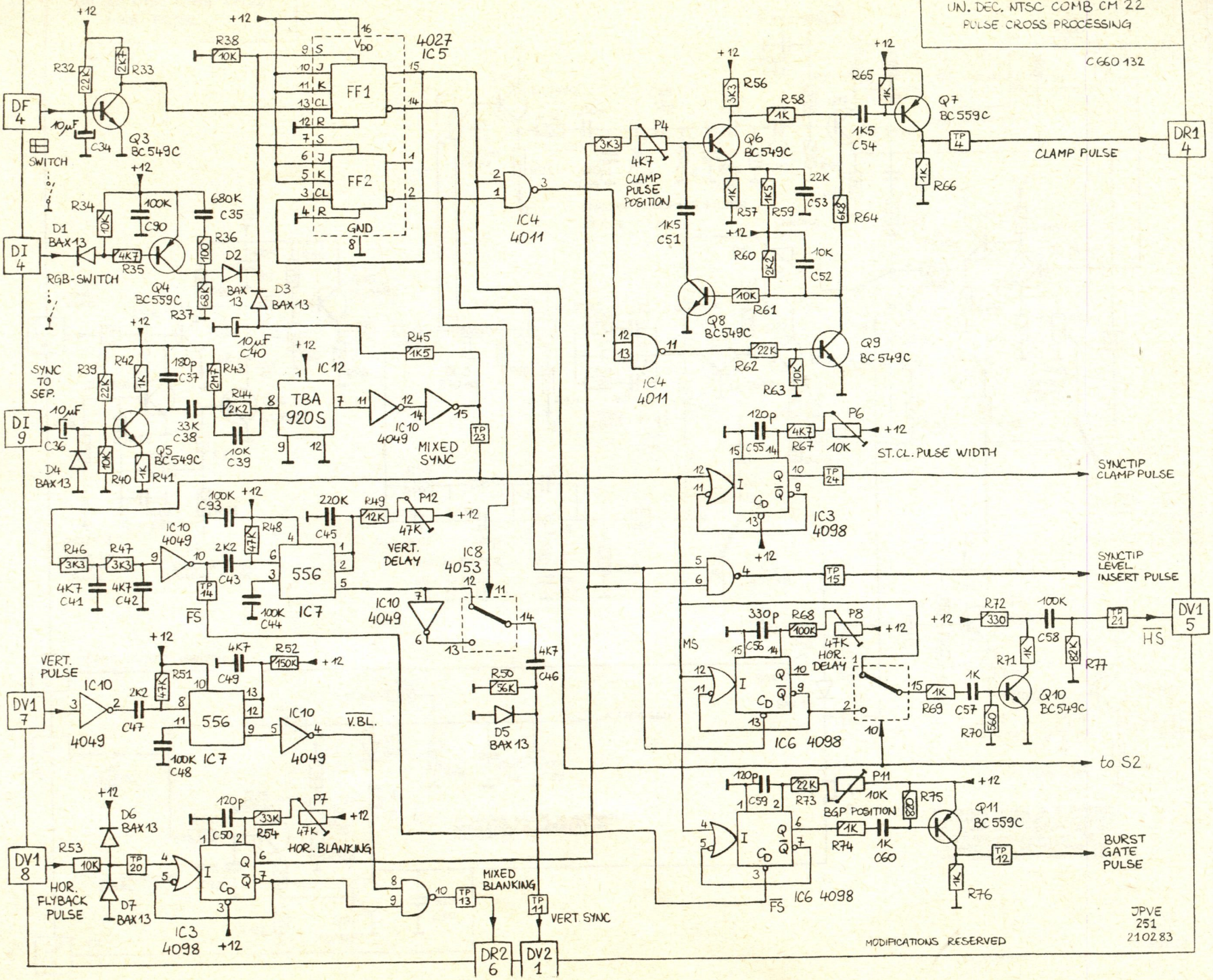

CRT DATABASE

UN. DEC. NTSC COMB CM 22
COMB FILTER

C 660 132

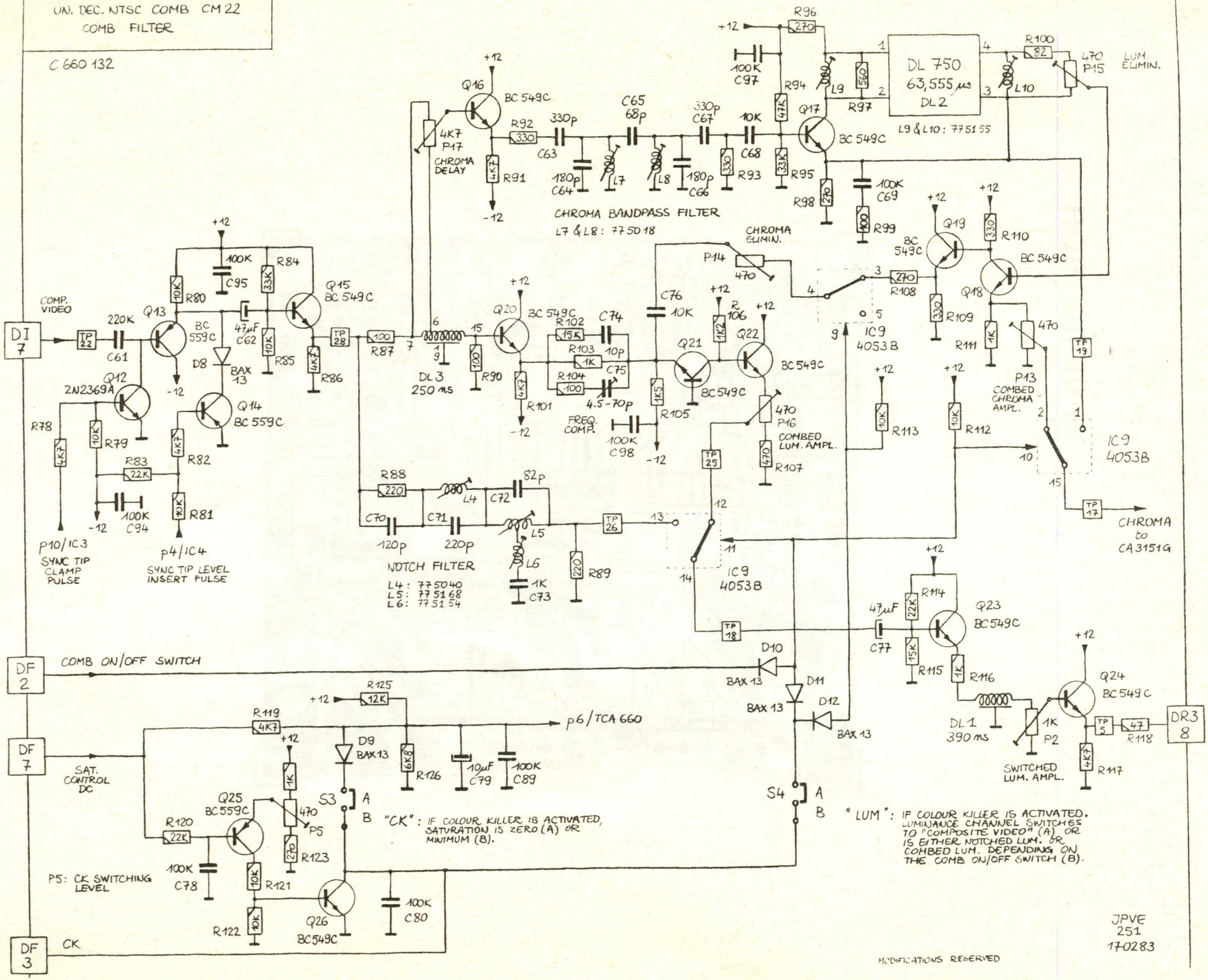

JPVE
251
17-0283

MODIFICATIONS RESERVED

CRT DATABASE

RGB amplifier

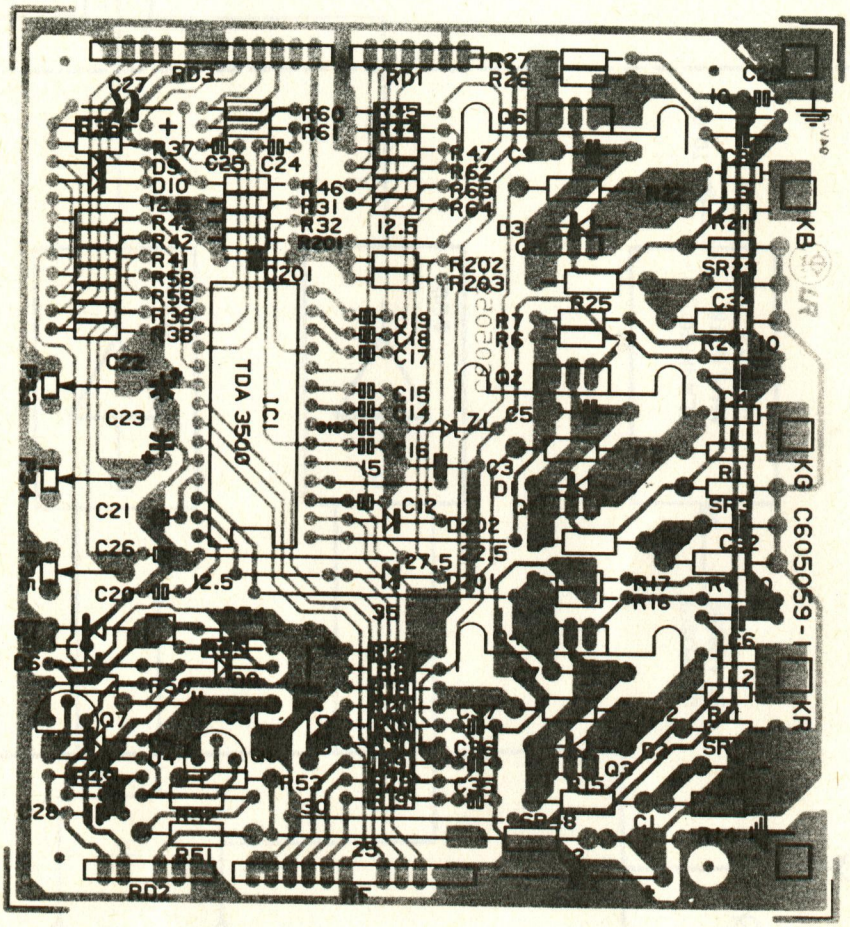

CRT DATABASE

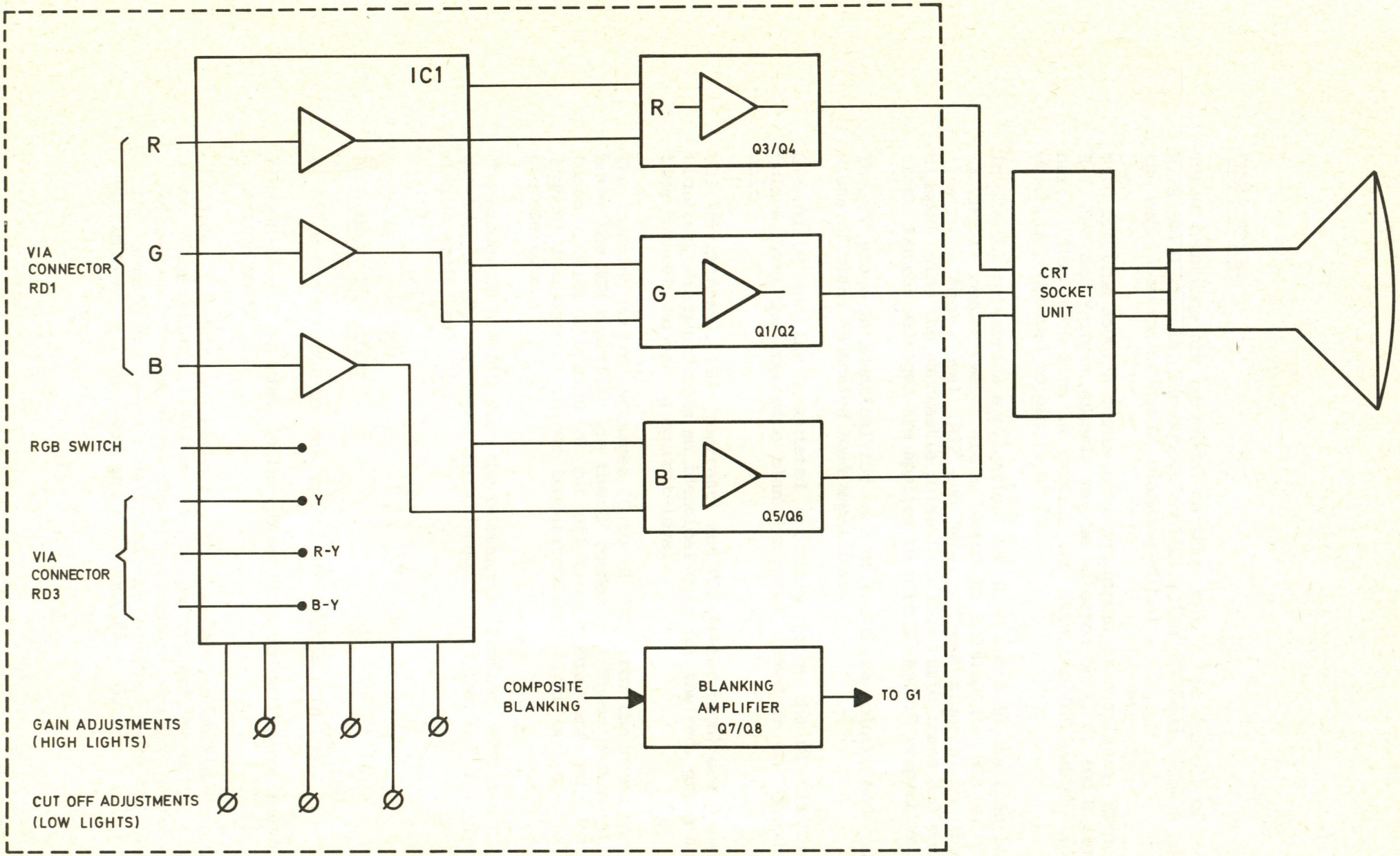

BLOCKDIAGRAM RGB OUTPUT UNIT

C660082 (FOR STANDARD VERSIONS)
C660139 (FOR VERSIONS WITH PULSE CROSS)

CRT DATABASE

DESCRIPTION

Three functions are performed on this unit : the control of the R, G and B signals, the output amplification of these signals and the amplification of the G1 blanking signal.

With IC1 (TDA 3500) a choice of input signal is available. Either R-Y, B-Y and Y input signals may be selected or R, G, and B signals. This selection is carried out with the RGB switch line which is connected to pin 11 of IC1.

In the not pulsecross application, the R, G and B inputs (pin 14, 13 and 12 respectively) are selected by holding the RGB switch line at a high level (R32 and R46). These signals are then clamped using the sandcastle pulse (pin 10). Brightness and contrast control voltages are applied to pins 20 and 19 respectively.

The end stage is identical for each of the three colours and consists of class AB active load amplifiers.

Q7 and Q8 and the associated circuitry forms the G1 blanking pulses from the composite blanking pulse formed on the decoder unit.

P33 (brightness), P34 (contrast) and P35 (saturation) are potentiometers which provides an identical gain for the red, green and blue channel, adjusting on unit-level.

The incoming control voltages (0 to 12 VDC) from the front panel enter the RGB amplifier via the RF connector. These control voltages provide alignment of cut off (low lights) and gain (high lights) for correct colour temperature and light output of the picture tube.

The diodes D9 and D10 form the beamcurrent limiter, D201 and D202 provide the RG off switching (disactivating the red and green output amplifier).

ADJUSTMENT PROCEDURE

1) Allow the monitor to warm up for at least 30 minutes.

2) Push in all switches in the potentiometers on the control and switch unit.

3) Adjust the gain and cut-off potentiometers to obtain + 6 VDC on their slider. You can do the adjustment by using a DC voltmeter. The gain and cut-off potentiometers are placed on the control and switch unit and are numbered P10, P11, P12 (gain R, G, B), P13, P14 and P19 (cut off R, G, B).

CRT DATABASE

4) Adjust the preset conditions for brightness and contrast in the same way. The preset potentiometers are also placed on the control and switch board and are numbered P6 and P7 respectively for brightness and contrast.

5) Put a picture on the screen e.g. colour bars.

6) Connect your oscilloscope to the cathode of the green channel. Adjust the clamping level and the black level of the video information so that the DC levels are equal (see diagram). You adjust it by turning the preset potentiometer for brightness (P6 on the frontpanel).

7) Connect your oscilloscope to the cathode of the green channel. Adjust for 100% saturation with P4 - preset potentiometer for saturation - on the control and switch board. See diagram below.

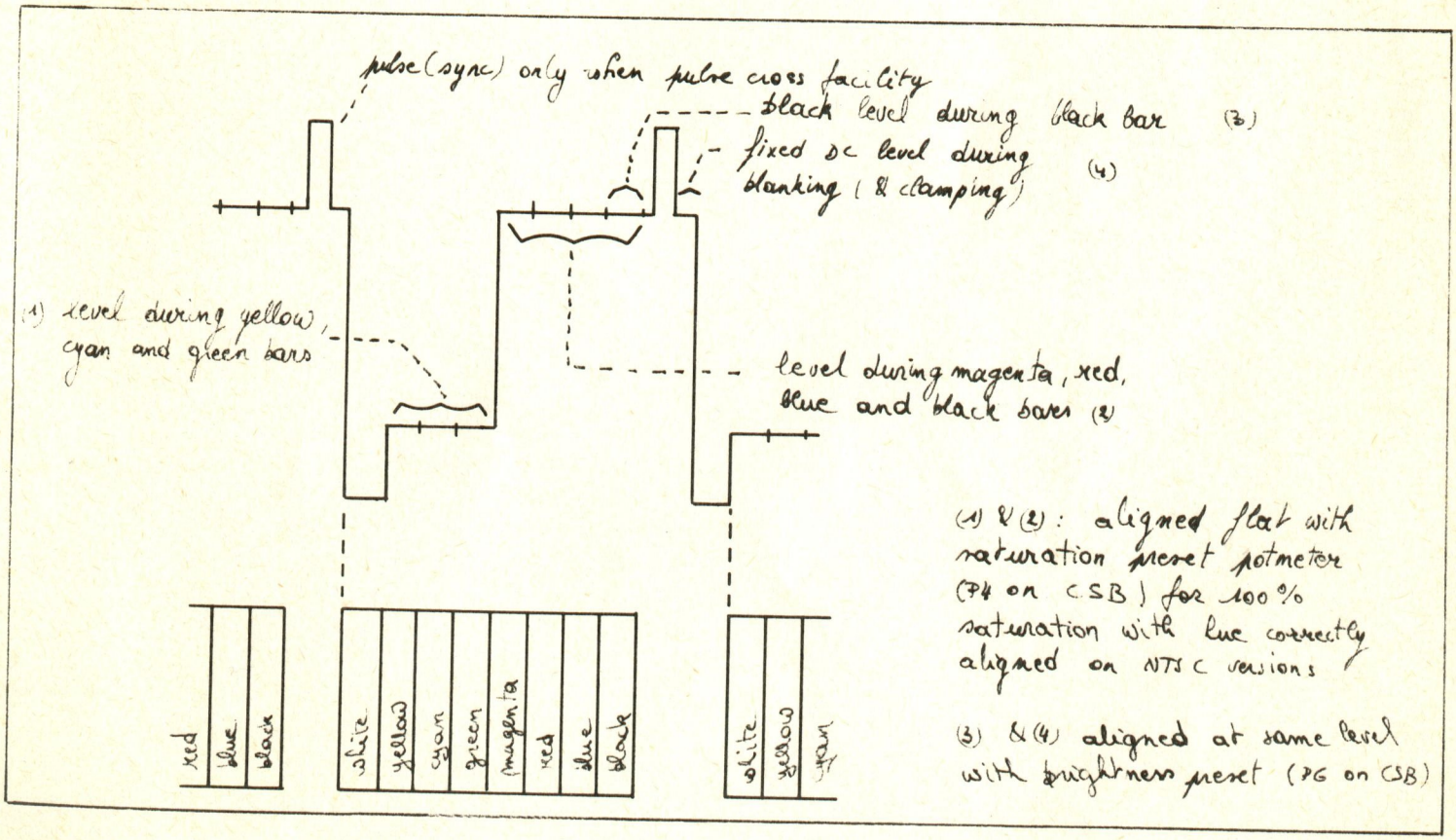

CRT DATABASE

12) Adjust the two other colours with the low-light (cut-off) potentiometers so that the three colours give 0.3 nit as brightness.

13) Apply the white window signal (+ 700 mV video).

14) Adjust the contrast preset potentiometer (P7 on the control and switchboard) until the mid colour gives 80 nit on the 100 nit scale of the analyser.

15) Adjust the two other colours with the high light (gain) potentiometers so that the three colours give 80 nit as brightness.

16) Take again steps 10, 12, 13, 14 and 15 until the readjusting is minimal (low lights $\pm$ 10%, high lights $\pm$ 5%).

17) Check the tracking by adjusting the contrast from 80 nit to 0.3 nit and seeing that the movement of the three meters coincide. If not repeat the adjustment.

CRT DATABASE

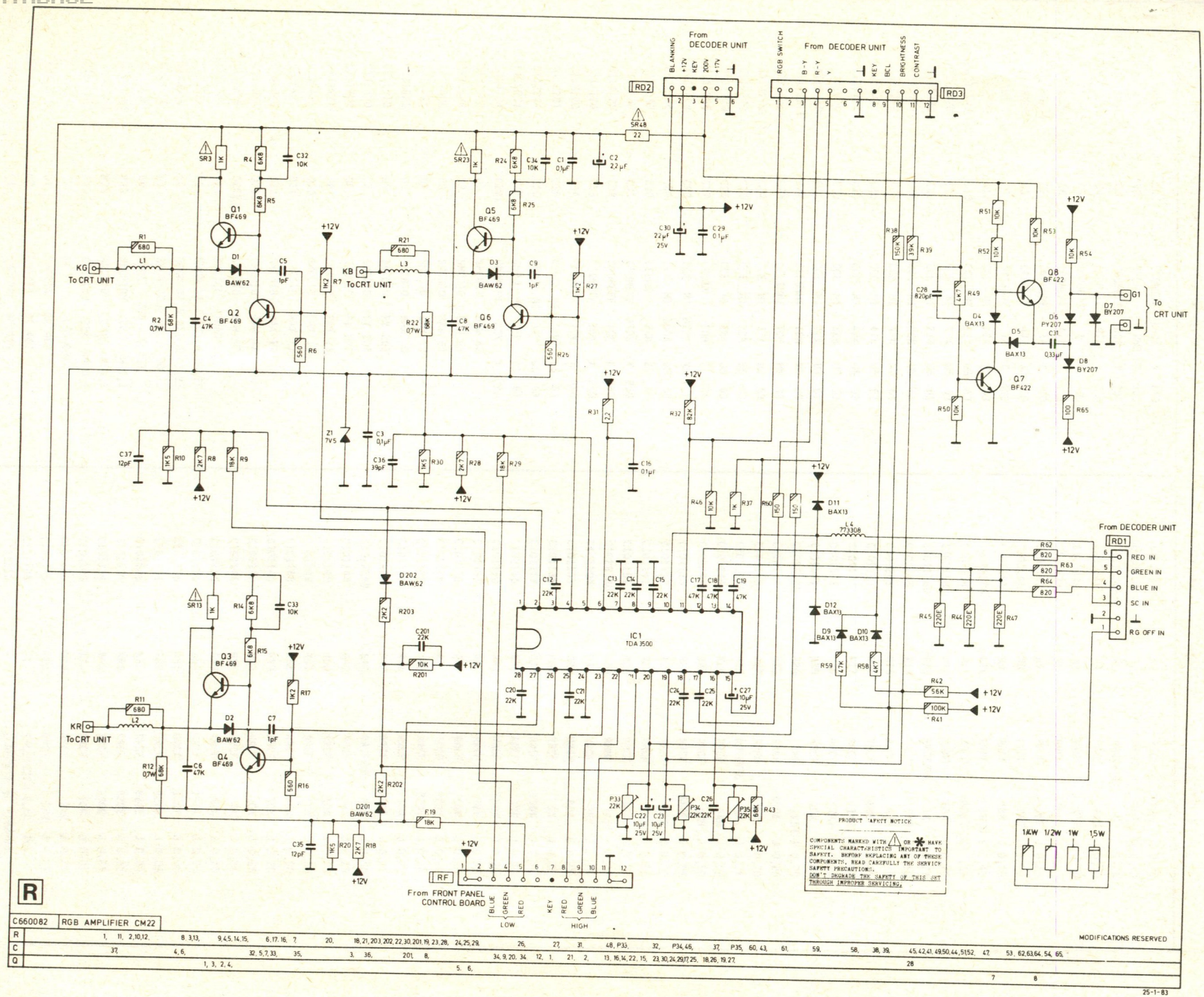

R

C660082 RGB AMPLIFIER CM22

R	1, 11, 2,10,12, 8, 3,13, 9,4,5,14,15, 6,17,16, 7, 20, 18,21,203,202,22,30,201,19,23,28, 24,25,29, 26, 27, 31, 48, P33, 32, P34,46, 37, P35, 60, 43, 61, 59, 58, 38, 39, 45,42,41,49,50,44,51,52, 47, 53, 62,63,64, 54, 65
C	37, 4, 6, 32, 5,7,33, 35, 3, 36, 201, 8, 34, 9, 20, 34, 12, 1, 21, 2, 13, 16,14,22, 15, 23,30,24,29,17,25, 18,26, 19,27
Q	1, 3, 2, 4, 5, 6, 28, 7, 8

MODIFICATIONS RESERVED

25-1-83

SRT SERVICE DATABASE

PARTS LIST

RGB OUT.

Part nr.: C660082

REF. NR.	POSITION	DESCRIPTION
C114132	C1	CPOMEFF 100K K 250
C111261	C2	CELAX 2M2 T 350
C114132	C3	CPOMEFF 100K K 250
C114128	C4	CPOMEFF 47K K 250
C1120711	C5	CN750PE 1P C 400
C114128	C6	CPOMEFF 47K K 250
C1120711	C7	CN750PE 1P C 400
C114128	C8	CPOMEFF 47K K 250
C1120711	C9	CN750PE 1P C 400
C112770	C12	CCE MI 22K U5 63
C112770	C13	CCE MI 22K U5 63
C112770	C14	CCE MI 22K U5 63
C112770	C15	CCE MI 22K U5 63
C112774	C16	CCE MI 100K U5 63
C112772	C17	CCE MI 47K U5 63
C112772	C18	CCE MI 47K U5 63
C112772	C19	CCE MI 47K U5 63
C112770	C20	CCE MI 22K U5 63
C112770	C21	CCE MI 22K U5 63
C1115315	C22	CELSNMI 10M M5 35
C1115315	C23	CELSNMI 10M M5 35
C112770	C24	CCE MI 22K U5 63
C112770	C25	CCE MI 22K U5 63
C112770	C26	CCE MI 22K U5 63
C111156	C27	CELAX 10M Z 25
C112738	C28	CCE MI 820P K5 63
C112774	C29	CCE MI 100K U5 63
C111157	C30	CELAX 22M Z 25
C114138	C31	CPOMEFF 330K K 250
C114120	C32	CPOMEFF 10K K 250
C114120	C33	CPOMEFF 10K K 250
C114120	C34	CPOMEFF 10K K 250
C112231	C35	CNPO MI 12P G5 63
C112237	C36	CNPO MI 39P G5 63
C112231	C37	CNPO MI 12P G5 63
C114124	C201	CPOMEFF 22K K 250
C131628	D1	SMCDIO BAW 62
C131628	D2	SMCDIO BAW 62
C131628	D3	SMCDIO BAW 62
C131621	D4	SMCDIO BAX 13
C131621	D5	SMCDIO BAX 13
C131910	D6	SMCDIO PY 207
C131910	D7	SMCDIO PY 207
C131910	D8	SMCDIO PY 207
C131621	D9	SMCDIO BAX 13
C131621	D10	SMCDIO BAX 13
C131621	D11	SMCDIO BAX 13
C131621	D12	SMCDIO BAX 13
C131628	D201	SMCDIO BAW 62
C131628	D202	SMCDIO BAW 62
C132734	IC1	SMCICL TDA3500
C773054	L1	SPON 32,5 RK1,6 D0,25
C773054	L2	SPON 32,5 RK1,6 D0,25
C773054	L3	SPON 32,5 RK1,6 D0,25
C773308	L4	CORE CH0 3/6 X18
C1061081	P33	RECP10H 22K M 0,1
C1061081	P34	RECP10H 22K M 0,1
C1061081	P35	RECP10H 22K M 0,1
C605059	01	PC -C660082
C1325145	Q1	SMCTRA BF 469
C1325145	Q2	SMCTRA BF 469
C1325145	Q3	SMCTRA BF 469
C1325145	Q4	SMCTRA BF 469
C1325145	Q5	SMCTRA BF 469
C1325145	Q6	SMCTRA BF 469
C132516	Q7	SMCTRA BF 422
C132516	Q8	SMCTRA BF 422

REF. NR.	POSITION	DESCRIPTION
C101134	R1	RRCF 680E J 0,25
C103158	R2	RRM0 68K J 0,70
C1011369	R3	RRCFFUL 1K J 0,2K
C101246	R4	RRCF 6K8 J 0,50
C101246	R5	RRCF 6K8 J 0,50
C101133	R6	RRCF 560E J 0,25
C101137	R7	RRCF 1K2 J 0,25
C101141	R8	RRCF 2K7 J 0,25
C101151	R9	RRCF 18K J 0,25
C1026186	R10	RRMF 1K54 F 0,40
C101134	R11	RRCF 680E J 0,25
C103158	R12	RRM0 68K J 0,70
C1011369	R13	RRCFFUL 1K J 0,2K
C101246	R14	RRCF 6K8 J 0,50
C101246	R15	RRCF 6K8 J 0,50
C101133	R16	RRCF 560E J 0,25
C101137	R17	RRCF 1K2 J 0,25
C101141	R18	RRCF 2K7 J 0,25
C101151	R19	RRCF 18K J 0,25
C1026186	R20	RRMF 1K54 F 0,40
C101134	R21	RRCF 680E J 0,25
C103158	R22	RRM0 68K J 0,70
C1011369	R23	RRCFFUL 1K J 0,2K
C101246	R24	RRCF 6K8 J 0,50
C101246	R25	RRCF 6K8 J 0,50
C101133	R26	RRCF 560E J 0,25
C101137	R27	RRCF 1K2 J 0,25
C101141	R28	RRCF 2K7 J 0,25
C101151	R29	RRCF 18K J 0,25
C1026186	R30	RRMF 1K54 F 0,40
C101104	R31	RRCF 2E2 J 0,25
C101159	R32	RRCF 82K J 0,25
C101136	R37	RRCF 1K J 0,25
C101162	R38	RRCF 150K J 0,25
C101155	R39	RRCF 39K J 0,25
C101160	R41	RRCF 100K J 0,25
C101157	R42	RRCF 56K J 0,25
C101158	R43	RRCF 68K J 0,25
C101128	R44	RRCF 220E J 0,25
C101128	R45	RRCF 220E J 0,25
C101148	R46	RRCF 10K J 0,25
C101128	R47	RRCF 220E J 0,25
C1012169	R48	RRCFFUL 22E J 0,50
C101144	R49	RRCF 4K7 J 0,25
C101148	R50	RRCF 10K J 0,25
C101248	R51	RRCF 10K J 0,50
C101248	R52	RRCF 10K J 0,50
C101148	R53	RRCF 10K J 0,25
C101148	R54	RRCF 10K J 0,25
C101144	R58	RRCF 4K7 J 0,25
C101156	R59	RRCF 47K J 0,25
C101126	R60	RRCF 150E J 0,25
C101126	R61	RRCF 150E J 0,25
C101135	R62	RRCF 820E J 0,25
C101135	R63	RRCF 820E J 0,25
C101135	R64	RRCF 820E J 0,25
C101124	R65	RRCF 100E J 0,25
C101148	R201	RRCF 10K J 0,25
C101140	R202	RRCF 2K2 J 0,25
C101140	R203	RRCF 2K2 J 0,25
C131756	Z1	SMCDIOZEN 0,5C 7V5
C313253	-	CONFOBTE IC PC8RM15
C133052	-	SMCTRA COOLER TO220
C313409	-	CONMINIMATCHM2,5-12
C313403	-	CONMINIMATCHM2,5-06
C313583	-	CONFOWTE P4 SNAP
C133032	-	SMC FIX TO 126

CRT DATABASE

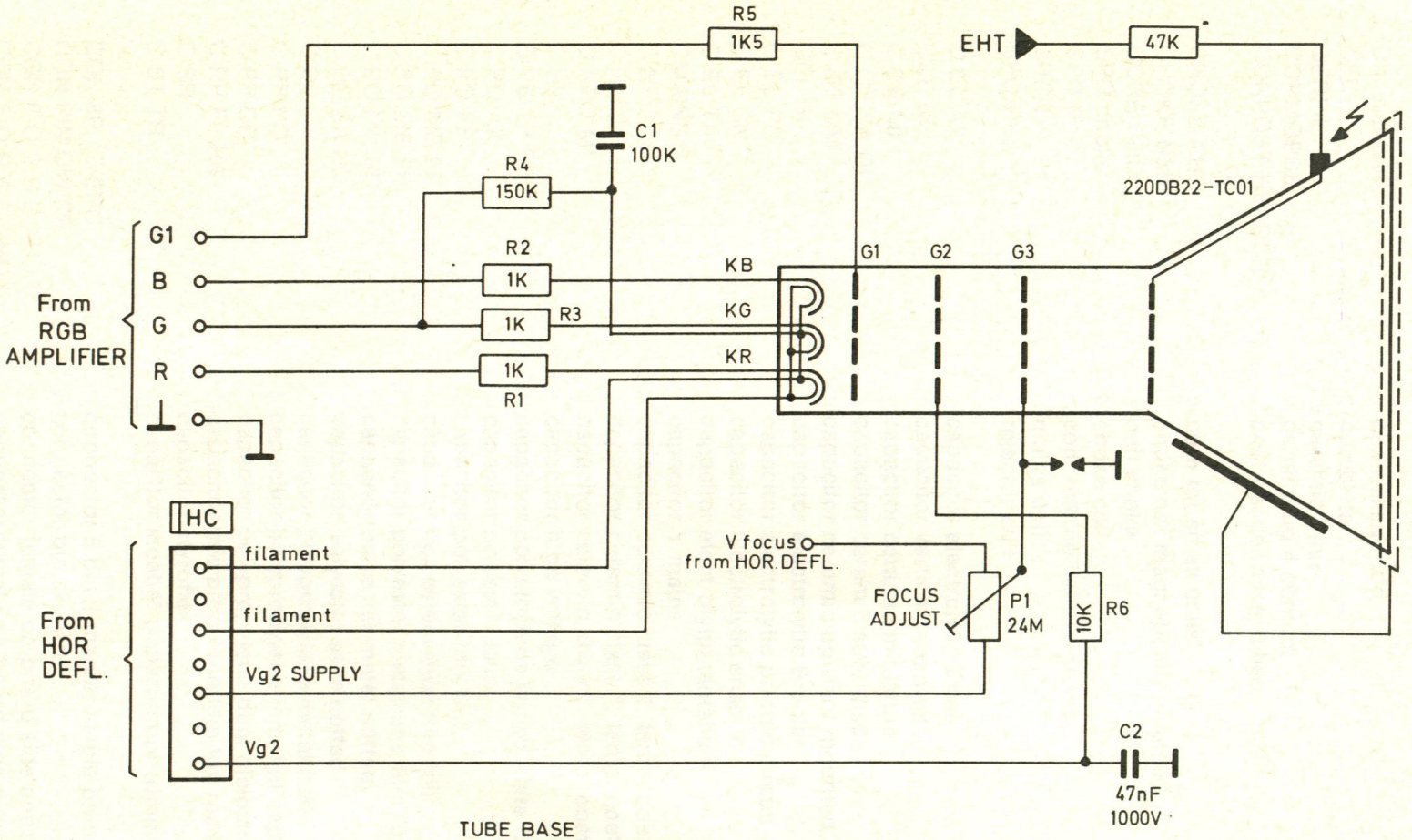

TUBE BASE

Pin 1 : Grid No. 3
Pin 4 : Cathode of Blue Beam
Pin 5 : NC
Pin 6 : Heater
Pin 7 : Heater
Pin 8 : Cathode of Red Beam
Pin 9 : Grid No. 1
Pin 10 : Grid No. 2
Pin 11 : NC
Pin 12 : Cathode of Green Beam

Grid No. 4 Anode and Shadow Mask

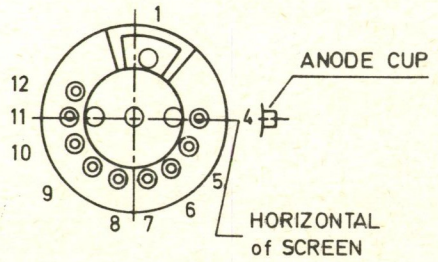

C660079 | CRT SOCKET CM22

MODIFICATIONS RESERVED

7-3-83

APPENDIX A : CODES TO PARTS LISTS

AUTPC	: automatic printed circuit board
Ch. support	: chassis support
CPL	: complete
CERFIL	: ceramic filter
CONMOPSE	: panel plug 4 contact
CONPOST HEADER	: post header assemblies
CHOKE CHO	: core for small coils
CHOKE NMS	: choke not magnetically shielded
CORE CHO	: coil choke
SPO choke	: choke coil
SPO IF	: coil intermediate frequency
SPON	: mains coil
SPO REJ	: rejector coil
C EL AX	: capacitor electrolytic axial
CCE DI	: capacitor vertical mounted
C CE MI	: capacitor ceramic miniature
C CE SA DI	: capacitor ceramic save disc
C CE UM	: capacitor ceramic up right mounted
CEL BI	: capacitor electrolytic Bipolar
C EL PR	: capacitor electrolytic printed circuit
C EL SN	: capacitor electrolytic snap-in
C EL TA	: capacitor electrolytic tantalium
CMAINS	: capacitor Y mains
C NPO TU	: capacitor ceramic class 1, temp. coeff. NPO, tubular
C N152	: capacitor ceramic class 1, temp. coeff. N1500
C NPO MI	: capacitor ceramic class 1, temp. coeff. NPO, miniature
C HV	: capacitor high voltage
C PE TP FP	: capacitor polyethylene tinned plate flat pack
C PO AX	: capacitor polyester axial
C PO FF	: capacitor polyester film foil
C PO ME FF	: capacitor polyester metal film foil
C PO ME FF	: capacitor polyester metallised film foil
C PO ME PO	: capacitor polyester metal potted
C PO SA PO	: capacitor polyester save potted
C PP	: capacitor polypropylene metallised
C PP PO	: capacitor polypropylene film, foil capacitor
C PP DD	: capacitor polypropylene dual dielectric
C PP FF RA	: capacitor polypropylene film foil radial
C SR	: capacitor styroflex
C ST TR	: capacitor steatiet trapezium or trimmer
CON 8P 1Z EPC	: connector 8 pin 1 marker single printed circuit
CON PIN OWIRE	: connector pin on wire
CON F O B S E AUD P	: connector female on board side entrance audio pin
CON F O B S E PHO P	: connector female on board side entrance phone pin
CON F O B T E	: connector female on board top entrance
CON F O C T E COA BNC	: connector female on board top entrance coax BNC
CON M O B T E	: connector male on board top entrance
CON M O B T E P10	: connector male on board top entrance pin 10
DEF COM LINE C	: deflection components line control
DEF COM MULTIP	: deflection components multipole
DEF COM YOKE	: deflection components yoke
DELAY L	: delay line

CRT DATABASE

APPENDIX C :
RECOMMENDED SPARE PARTS LIST CM22

UNIT LEVEL

DESCRIPTION	PART NR
CRT SOCKET UNIT	C131106
HORIZONTAL DEFLECTION UNIT	C660078
CRT SOCKET UNIT	C660079
VERTICAL DEFLECTION UNIT	C660080
POWER SUPPLY UNIT	C660081
RGB AMPLIFIER UNIT	C660082
CONTROL UNIT	C660083
PAL DECODER UNIT	C660084
INPUT UNIT	C660085
TEMP. SENSOR UNIT	C660086
NTSC DECODER UNIT	C660132

COMPONENT LEVEL

UNIT	DESCRIPTION	PART NR
HORIZONTAL DEFLECTION C660078	TRIMPOT 220K	C106112
	TRIMPOT 4M7	C1062161
	TRIMPOT 100 Ohm	C106511
	FOCUS POTM.	C107607
	COND. 8n2 1500V	C111714
	COND. 1n 2000V	C111760
	COND. 47n 1200V	C114636
	VOLTAGE MULT.	C132057
	TRANS. BF 422	C132516
	TRANS. BU 508	C132574
	CLIP SOT-93	C133054
	INSULATION SOT-93	C133055
	RELAY	C324338
	BRIDGE COIL	C670007
	DRIVER TRF	C670008
	LINE TRF	C670009
	CHOKE	C773173
CRT SOCKET C660079	COND. 47n 1000V	C114602
	COND. 100n 630V	C114874
	CRT SOCKET	C311034

CRT DATABASE

RECOMMENDED SPARE PARTS LIST CM22

COMPONENT LEVEL (Cont.)

UNIT	DESCRIPTION	PART NR
VERTICAL DEFLECTION UNIT C660080	TRIMPOTM 220E	C1062021
	TRIMPOTM 2K2	C1062051
	TRIMPOTM 10K	C1062071
	TRIMPOTM 47K	C1062091
	TRIMPOTM 100K	C1062111
	TRIMPOTM 220K	C1062121
	TRIMPOTM 2M2	C1062151
	TRANS. BD237	C1314446
	ZENER DIODE 5V1	C131716
	ZENER DIODE 6V2	C131720
	ZENER DIODE 12V	C131740
	IC TDA 1170	C132164
	IC TDA 2593	C132748
POWER SUPPLY C660081	COND 220M 180V	C111699
	TRANS BD 136	C131434
	IC COY 80	C131699
	ZENER DIODE 2V1	C131733
	ZENER DIODE 27V	C131765
	DIODE PY207	C131910
	DIODE PY206	C131911
	DIODE BYX72-150	C131949
	DIODE BY179	C131950
	THY BT151-500R	C132213
	TRANS BUX 39	C132531
	TRANS BU508	C132574
	IC TDA 4600	C132747
	IC TL 494	C137296
RGB AMPLIFIER C660082	TRIMPOT 10K	C1061091
	ZENER DIODE 7V5	C131756
	TRANS. BF 469	C1325145
	TRANS. BF 422	C132516
	IC TDA 3500	C132734

CRT DATABASE

RECOMMENDED SPARE PARTS LIST CM22

COMPONENT LEVEL (Cont.)

UNIT	DESCRIPTION	PART NR
CONTROL UNIT C660083	POTM. 10K	C107250
	TRIMPOTM. MULTITURN 10K	C107513
	LED D5	C131664
	LED CQX21	C131669
	HEADPHONE CONNECTOR	C313639
	MAINS SWITCH N307	C324781
	UPPER SWITCH COMB	C324785
	LOWER SWITCH COMB	C324786
	KNOB	C356886
PAL DECODER C660084	IC TDA 1412	C134006
	IC 4053B	C137700
	IC TDA 3560	C137701
	CHOKE NMS 4U7	C3061282
	DELAY LINE 64	C306511
	DELAY LINE 280	C306514
	X-TAL 8,867 MHz	C306816
	CHOKE	C775041
	CHOKE	C775154
	CHOKE	C775165
	CHOKE	C775168
INPUT UNIT C660085	ZENER DIODE 3V9	C131757
	IC TBA 120U	C132190
	IC TBA 1037	C132739
	SWITCH C12U	C324159
TEMP. SENSOR C660086	TRIMPOT 100K	C107516
	IC LM3911N	C134026
	CHOKE	C773028
	CHOKE	C773309

NOTES

PRINTED IN BELGIUM

NOTES